Produced-Water-Treatment Systems: Comparison of North Sea and Deepwater Gulf of Mexico

J.M. Walsh, CETCO Energy Services

Summary

In general, water-treatment systems in the North Sea differ from those in the deepwater Gulf of Mexico (GOM). The two most apparent differences are the extensive use of hydrocyclones in the North Sea, and the use of large, multistage horizontal flotation units in the deepwater GOM. Deepwater-GOM platforms use hydrocyclones, but not nearly to the extent that they are used in typical North Sea platforms. Typically in the North Sea, if flotation is used at all, it is a vertical compact unit. The objective of this paper is to provide an understanding of the reasons for these differences.

In this paper, field data and modeling results are presented to explain these differences. The models accurately correlate the measured drop size and oil-in-water concentration observed in the two regions. In addition, the modeling tools are used to answer hypothetical "what if" questions. This allows isolation of individual variables such as fluid temperature, shear, separator residence time, and fluid density. Thus, the modeling provides a detailed understanding of the relative importance of these variables. It also provides a direct comparison of the performance of North Sea vs. GOM process configurations.

While the qualitative conclusions are well-known (i.e., deepwater separation systems are designed to minimize weight and space), the detailed understanding provided here provides insight into the design of water-treatment systems in general. It also emphasizes, in a quantitative way, the importance of carrying out effective water treatment early in the process and the necessary use of large end-of-pipe equipment when this is not possible.

Introduction

This paper is a companion to SPE-159713-MS (Walsh and Georgie 2012), in which best practices, details of several platforms, and a wide range of observed differences from the North Sea and the deepwater Gulf of Mexico (GOM) were given. The qualitative differences from this previous work are summarized in the bullet points provided later in this section. In the present paper, field data and modeling results are provided in greater detail.

The differences in water-treatment systems between the two regions have been discussed qualitatively both in the companion paper and in the literature (Bothamley 2004; Walsh and Frankiewicz 2010; Walsh and Georgie 2012). As discussed by Bothamley (2004), there are several differences between facilities in the North Sea and those in the deepwater GOM. Floating production, storage, and offloading (FPSO) vessels and fixed-leg platforms are commonly used in the North Sea. These topside facilities are typically much larger and heavier than those used in the deepwater GOM. FPSO vessels have only recently been used in the deepwater GOM, with Bullwinkle being the only fixed-leg deepwater platform. Floating spars and tension-leg platforms are typically used in the deepwater GOM. These floating facilities are smaller and weigh less than typical facilities in the North Sea. Other factors that account for the differences are capital availability, tax regimes, operating costs, extraction techniques, reservoir characteristics, the properties of the fluids being treated, and regulations.

In terms of extraction strategies, there are fundamental differences between the two regions, as well. Almost all North Sea oil fields are developed, at least in early life, with pressure maintenance relying on water and/or gas injection. Fluid production in many of these fields has reached high water cut. In the deepwater GOM, most production is relatively dry, and there are only a few fields that have applied water injection. These development strategies have a strong effect on the oil/water ratio over the life of a field.

As shown in **Fig. 1,** a typical North Sea oil-/water-treatment system consists of three-phase separation, with hydrocyclones on the water discharge throughout the facility. On many installations, heat is added upstream of the inlet separators (not shown in Fig. 1). The effluent (product) from the hydrocyclones is typically routed to a degassing vessel. As discussed in Walsh and Frankiewicz (2010), the degassing vessel in this configuration acts as a dissolved-gas flotation unit in the sense that gas will break out and help separate oil from water in this vessel. The final stage is a compact flotation unit. In some cases, flotation is not required to achieve the overboard discharge target.

The main features of North Sea systems can be summarized as follows:

- There is relatively more weight and space available than in the deepwater GOM.
- They have a relatively high arrival temperature or heat is added upstream.
- They have several primary separators to segregate incompatible fluids.
- Almost all primary separators are three phase.
- There are hydrocyclones on every three-phase separator.
- Hydrocyclones are used upstream (on the aforementioned three-phase separators), which provides greater driving force for separation.
- Hydrate inhibitor is not commonly used during steady-state operation.
- They use slightly more-corrosive fluids (higher CO_2 and H_2S) than in the deepwater GOM; hence, there is greater use of corrosion inhibitor.
- Flotation flocculant is added upstream of the degassing vessel and downstream of valves.
- Flotation, if present, is a compact vertical unit.

As shown in **Fig. 2,** and as discussed in Walsh and Frankiewicz (2010), typical deepwater GOM oil/water systems consist of one or two stages of two-phase separation (gas/liquid), followed by a three-phase free-water knockout. Depending on the hydrate-prevention strategy, the fluids may be cooled somewhat by the long

This paper (SPE 159713) was accepted for presentation at the SPE Annual Technical Conference and Exhibition, San Antonio, Texas, USA, 8–10 October 2012, and revised for publication. Original manuscript received for review 25 March 2014. Revised manuscript received for review 11 November 2014. Paper peer approved 18 November 2014.

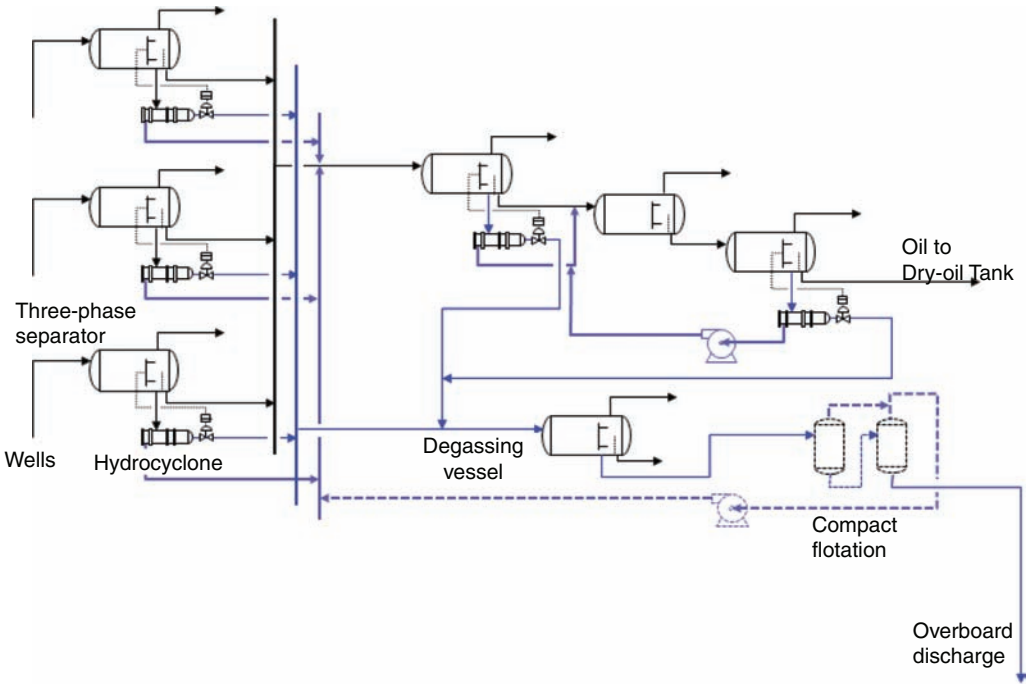

Fig. 1—Typical North Sea oil/water-separation system.

riser between the seafloor and the platform topside. Inlet heating very often is not used. Heat is typically added downstream, primarily to assist in achieving the target oil vapor pressure, and the oil-dehydration target.

In the deepwater GOM, oil/water separation tends to be focused toward the end of the gas/oil/water-separation process. The produced water may be processed through a hydrocyclone. However, in some facilities, a hydrocyclone is installed but not used. The reason for this is discussed in more detail later in this section. Horizontal multistage flotation, having a retention time of 6 minutes or more, is commonly used. In some cases, one- or two-stage vertical flotation is used. When this is the case, retention time in the vertical flotation units is comparable with that in a horizontal multistage unit and therefore cannot be accurately referred to as compact flotation. Compact flotation does not have a universally agreed upon definition, but it is almost always vertical, single stage, and has a retention time of roughly 30 seconds to perhaps a minute. In the author's opinion, compact flotation operating at design capacity is not adequate or practical to use in the deepwater GOM. Cases can be found in which compact flotation performs adequately, but those cases are generally

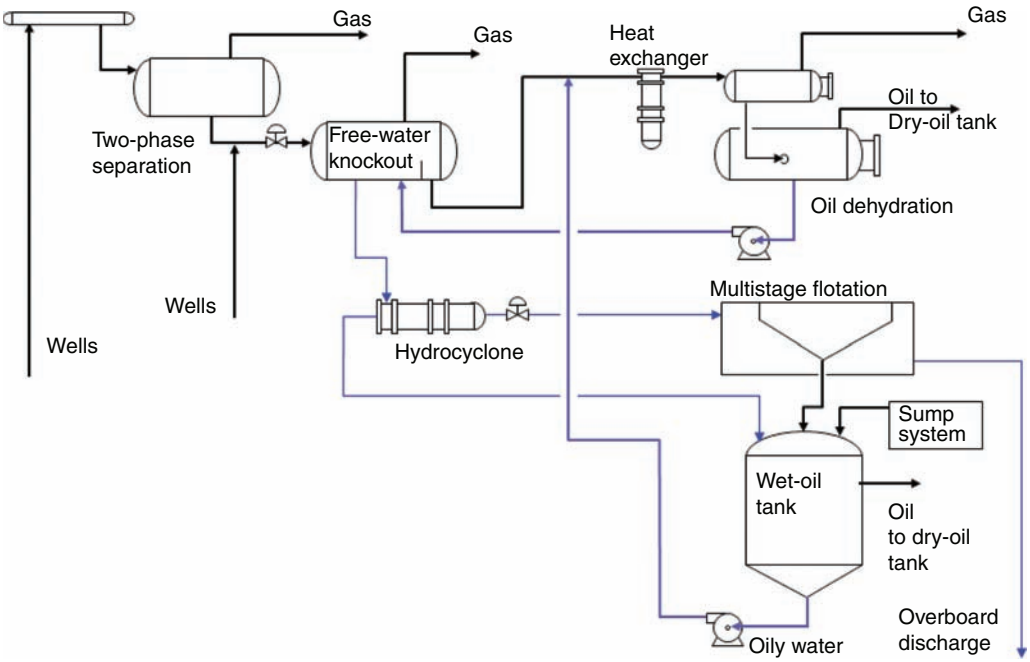

Fig. 2—Typical deepwater GOM oil/water-separation system.

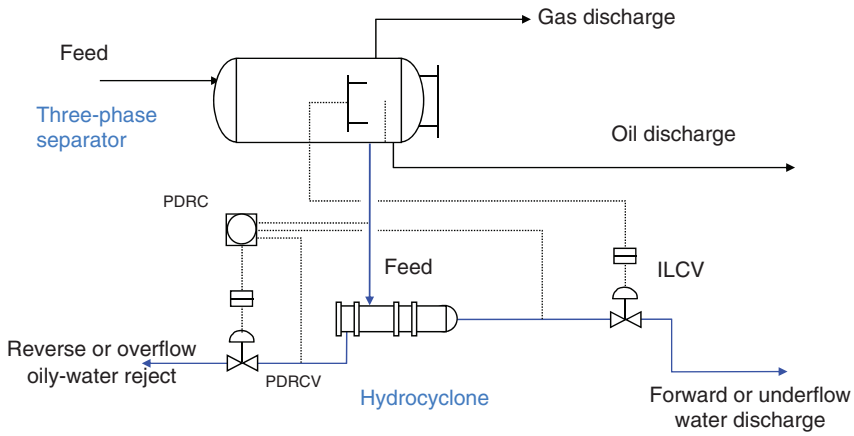

Fig. 3—Typical North Sea three-phase separator fitted with a hydrocyclone. The interface level-control valve (ILCV) is downstream of the hydrocyclone. The hydrocyclone control system is shown with a differential pressure controller and an ILCV. PDRC is the pressure differential ratio controller, and PDRCV is the pressure differential ratio control valve.

associated with produced-water-flow rates that are lower than those of the design. In such cases, retention times are relatively long, and strictly speaking, the unit would no longer be considered compact.

As discussed by Bothamley (2004), offshore platforms in both regions produce dehydrated gas without dewpoint control, and they produce dehydrated crude oil with reduced vapor pressure. Thus, both regions use a staged (cascaded) pressure-reduction system. This cascaded or multistaged separation system, which uses successively lower-pressure separators in series, maximizes liquid recovery and minimizes overall load on the gas-compression system. It is not the author's intention to suggest that staged separation is the root cause of problems in the water-treatment system. There is essentially no other sensible way to condition the oil and the gas. Both Fig. 1 (North Sea) and Fig. 2 (deepwater GOM) are similar in this respect—they clearly show the pressure cascade. This is more or less the point at which the similarity stops.

In the deepwater GOM, specification crude oil is produced offshore, which is suitable for direct routing to the refineries located on the coast of the GOM. The crude oil has low Reid vapor pressure (<11 psi) and low basic sediment and water (<1% by volume). This is almost without exception because it is a requirement for the use of the extensive pipeline infrastructure that exists. In the North Sea, typical crude-oil vapor pressure from offshore is higher and the crude has a water content of 2% by volume. The relatively recently deployed FPSO vessels are an exception for which specification crude oil is produced for tanker loading.

Also of relevance to the present study, primary separators in the North Sea tend to have a narrower range of pressures (from 150 to 750 psia) compared with those in the deepwater GOM (from 150 to 1,800 psia). Depending on the well productivity and sand-control requirements, wells in the deepwater GOM might be routed to high-pressure (1,500 to 1,800 psia), intermediate-pressure (750 psia), or low-pressure (150 psia) separators. The intermediate-pressure and high-pressure separators are two-phase separators; thus, oil and water are discharged together through the same nozzle and are sheared intensely through the level-control valve. This results in a high concentration of oil dispersed in the water phase and in small oil drops, which are difficult to separate. In the North Sea, most wells fall into the low-pressure range, with some wells in the intermediate-pressure range. Essentially, all inlet separators in the North Sea are three-phase, which allows for the use of a hydrocyclone on the water discharge and provides segregation of oil and water before the fluids are passed through the level-control valve.

The main features of deepwater-GOM systems can be summarized as follows:

- There is relatively less weight and space available than in the North Sea.
- Heat is added downstream of the produced-water-separation vessels.
- There are few primary separators, which allows for limited segregation of crude oils and water.
- Primary separators are small and two-phase (sized for degassing), and thus have no hydrocyclones on water discharge.
- Hydrocyclone units are operated at lower driving pressure.
- Treated produced water contains a higher concentration of smaller oil droplets of less than 10 μm, as a result of more shearing and pumping in some cases.
- They exhibit moderately heavy use of hydrate inhibitor and other flow-assurance chemicals.
- Large, multistage horizontal flotation is required.

As discussed previously, there are several differences between the typical deepwater-GOM system and the typical North Sea system. However, from a water-treatment standpoint, there is one difference that has greater impact than most others. The process flow in the North Sea involves three-phase separators fitted with hydrocyclones. These separators provide two stages of oil/water separation upstream of the shearing effect of the interface control valve—gravity separation in the vessel followed by intense centripetal separation in the hydrocyclone. The configuration is shown in **Fig. 3.**

As shown, the three-phase separator has a spillover weir and an oil-discharge nozzle. Water accumulates upstream of the spillover weir and is discharged. Other configurations are often used, such as an oil bucket with an underflow/overflow arrangement for the water. The inlet device is not shown in Fig. 3, nor are any perforated plates or gas-demisting devices. While all of these internal elements are crucial for achieving good separation, the important issue at this stage is the difference between two-phase and three-phase separation.

The process flow in the deepwater GOM involves a combination of two-phase separators and three-phase separators. These separators provide initial oil/water separation upstream of the interface control valve. The configuration is shown in **Fig. 4.**

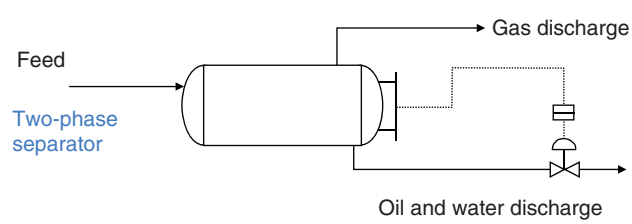

Fig. 4—Typical deepwater GOM two-phase separator. Oil and water are discharged through a common nozzle and flowline. Both fluids are sheared because of the level-control valve.

Platform	Year of First Oil	Structure	Peak Oil Rate (1,000 BOPD)	Topsides Weight (t)
Gullfaks A	1986	Gravity-based concrete	180	48 590
Gullfaks B	1988	Gravity-based concrete	180	27 395
Gullfaks C	1990	Gravity-based concrete	180	52 935
Statfjord A	1979	Gravity-based concrete	200	41 300
Statfjord B	1982	Gravity-based concrete	200	43 000
Statfjord C	1985	Gravity-based concrete	200	48 000
Troll A	1996	Gravity-based concrete	140	25 400
Troll B	1995	Floating concrete	140	22 400
Troll C	1999	Floating steel	140	20 000
Heidrun	1995	Floating concrete	200	65 000
Draugen	1993	Gravity-based concrete	100	28 000
Eider	1988	Fixed steel	20	11 200

Note that the peak oil rate given in this table was estimated from very granular data and as such is probably accurate to +/– 20%, and should not be used for any application requiring high accuracy. Also note that many of these platforms have experienced up to 40% water cut during the period of high oil production such that BOPD is not entirely representative of fluid-handling capacity.

Table 1—Weight of representative North Sea platforms.

As shown in Fig. 4, the two-phase separator has a level indicator and a level-control valve. Oil and water are discharged together and flow through the separator discharge nozzle and through the level-control valve, where they are sheared. Not shown in Fig. 4 are any of the internal devices that must be installed for good flow distribution and demisting of the gas.

In general, vessel internals of the separators in North Sea systems are well-assessed by computational-fluid-dynamics modeling and by full-scale pilot testing before final selection. In the GOM, vessel internal design very often is standard and not necessarily optimum for the application.

As shown in **Tables 1 and 2,** the typical weight of oil-producing platforms in the North Sea and the deepwater GOM differs significantly. In many cases, for roughly the same oil-production capacity, the platforms in the North Sea are two to three times heavier than those in the deepwater GOM. Another way to view this information is to say that weight availability is much higher in the North Sea because of the platform structure that is used in the relatively shallower water compared with the deepwater GOM. This has been highlighted in the main-features lists for each region given previously.

Not all platforms in the two regions are included. Only those platforms in each region that have moderate American Petroleum Institute (API) gravity crude oil (25 to 30 °API), and highly saline produced water (100 000 to 250 000 mg/L total dissolved solids) were included. Most platforms in each region have fluid properties that fall in this range. However, there are also a few platforms in each region with fluid properties that do not. They were excluded from this analysis because most of these platforms have higher API gravity. For example the Ram Powell (deepwater GOM) gas-processing facility was excluded. It was discovered later that we could have included such platforms in this analysis because they exhibit the same water-treatment-lineup differences as their counterparts, as seen with the moderate-API-gravity crude oils. For simplicity, however, they were excluded.

Platform	Structure	Component	Peak Oil Rate (1,000BOPD)	Weight (t)
Ursa	TLP	Deck	220	5700
		Topside, including the rig		10 180
Mars	TLP	Hull	220	7100
		Deck		3300
		Topside		6200

TLP = tension leg platform.
Note that the peak oil rate for Ursa and Mars is roughly 220,000 BOPD, with an approximate water production of 10 to 20% during the period of peak oil production.

Table 2—Weight of representative deepwater-GOM platforms.

In this paper, the author compares the produced-water-treatment-process differences between the North Sea and the deepwater GOM, and offers explanations as to why these differences have occurred. While the differences between process lineups are real and discernible (see Figs. 1 and 2), several factors must be taken into account to explain the differences. In the companion paper (Walsh and Georgie 2012), a wide range of explanations was discussed. In the present paper, the focus is on fluid characteristics (hydrocarbon density and temperature), and the use of two-phase vs. three-phase primary separation.

The approach in the present paper is to provide field data where available; to apply modeling to analyze the data; and to use the modeling tools to isolate the independent effect of fluid properties, shear rate, residence time, and process lineup. In doing so, an understanding is provided of the various drivers and constraints that influence the design of a process lineup for produced-water treatment. The tools were implemented from the literature in some cases and developed by the author in other cases. They were used for several years in designing new systems and troubleshooting existing systems. As applied here, the modeling tools provide a quantitative estimate of the relative importance of various factors that differentiate the systems in the two regions (such as inlet fluid shear and temperature, separator flux rate, water density, oil density, separator residence time, application of hydrocyclones, and flotation). The conclusion from this analysis is that both regions have optimized their process lineups within the constraints of the region.

The main advantage in the use of modeling tools in this application is to answer "what-if" questions. Specifically, modeling is used to determine which of several factors has the greatest impact on water treatment. The models used here rely on input data such as fluid properties, pressure drop, flow rates, equipment type and size, and process lineup. The modeling tools provide estimates of drop-size distribution and oil-in-water concentration. They are used both for designing new systems and for troubleshooting existing systems.

When used for troubleshooting, the modeling tools help define the technical limit of a given piece of equipment in a given process lineup. The technical limit is defined as the expected performance on the basis of the equipment design and on the conditions of the process at the time of the study. If a piece of equipment is not performing according to the technical limit, further work is con-

ducted to understand why. Various reasons include broken internal devices, poor adjustment of settings, and fluid properties or process conditions outside of the design intention.

Modeling

Until now, a quantitative analysis of the differences in water-treatment systems for the North Sea and the deepwater Gulf of Mexico (GOM) has not been presented in the literature. In this section, modeling tools are applied, together with field data, which demonstrate the differences in a quantitative manner. The models have been developed through the use of fundamental principles (Bothamley 2004; Walsh and Frankiewicz 2010; Walsh and Georgie 2012) and have been validated and adjusted to reproduce field data (Khatib 1996; Bothamley 2004; Walsh and Frankiewicz 2010).

Oil-Drop-Diameter Distribution. Oil-drop diameter is a key parameter in modeling water-treatment equipment. There are many ways of measuring oil-drop diameter in the field and in the laboratory. The original method, which was based on photomicroscopy and manual counting of drops, has been in practice for nearly 30 years. It remains one of the more-accurate methods, if properly executed. Modern methods use particle imaging. Recently, particle-imaging instruments and software have achieved a level of accuracy that is comparable with that of the manual photomicroscopy method. Of course, the instruments are much faster.

One of the well-established parameters in modeling is the maximum oil-drop diameter. It is loosely defined as the maximum drop diameter that will exist under a given set of conditions. For example, in determining the effect of valve shear, D_{max} is the maximum drop diameter in the discharge of the valve. It can be estimated on the basis of simple (Hinze-Kolmogorov) formulas, which take into account the pressure drop, residence time in the turbulence zone, water density, water viscosity, dispersed-phase viscosity, and interfacial tension.

Many separation devices are characterized by the D_{max} (i.e., the smallest oil-drop diameter that will be completely separated). By applying Stokes law to gravity-based and enhanced-gravity-based separation, such as occurs in separators and hydrocyclones, D_{max} and the oil-in-water concentration can be predicted. From a modeling standpoint, D_{max} is a simple and useful parameter.

In reality though, oil-drop diameter is a distribution function. The field-measurement methods discussed in the preceding paragraphs provide a histogram of oil-drop diameter that can be converted readily into a distribution function. There is a significant and growing body of literature that provides modeling insight into the drop-diameter distribution and the manner in which it changes with shearing, coalescence, and separation processes. Further, the formulas that are based on D_{max} are inaccurate where significant drop shearing occurs, as will be discussed later in this section. Thus, the modeling work presented here is based on oil-drop-diameter distribution, rather than D_{max}.

Drop-diameter distribution is modeled with a log-normal distribution. It is given by the following formula:

$$f(x) = \frac{1}{\beta\sqrt{2\pi}}(1/x)\exp\left[-(\ln x - \alpha)^2/2\beta^2\right], \quad (1)$$

where x is an independent variable (e.g., drop diameter), α and β are adjustable parameters, and $f(x)$ is the probability distribution of x values. The parameters α and β are simply that—parameters. They are typically adjusted to match a measured drop-diameter distribution. The log-normal distribution is most easily calculated with the parameters α and β, but can also be calculated by selecting the mean and standard deviation. Those quantities are calculated independently from the following formulas.

The mean of x values is given by

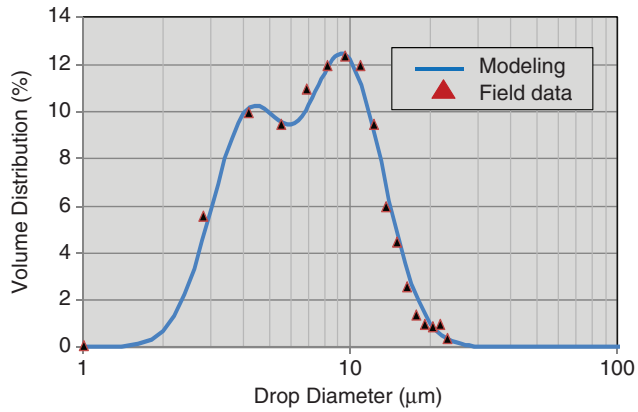

Fig. 5—A pronounced example of a bimodal drop-diameter distribution from the deepwater GOM. The bimodal distribution is typical of systems in which drop shear occurs. Points are field data measured with a drop-size analyzer. The line is a curve-fit with two log-normal distribution functions.

$$\mu = \exp\left(\alpha + \beta^2/2\right). \quad (2)$$

The standard deviation of x values is given by

$$\sigma = \mu\exp\left(\beta^2 - 1\right). \quad (3)$$

Another distribution function that is often used in modeling oil/water dispersions is the Rosin-Rammler distribution. The Rosin-Rammler is a versatile mathematical function because the exponent of the independent variable is an adjustable parameter; therefore, the shape of the distribution function is flexible. It can be adjusted to have a long nose for the distribution of large drops or to have a long tail for distribution of small drops. It was originally developed to model the crushing of coal particles and, hence, tends to model accurately the distribution of small drops generated by shearing processes. A comparison of the Rosin-Rammler, the log-normal, and the Weibull distribution is given in Brown and Wohletz (1995).

Much of the literature relating to drop/drop coalescence tends to prefer the use of the log-normal distribution (Zhou and Krest 1998). However, calculations of the effect of coalescence are not taken into account in the present work. As will be demonstrated in subsequent sections, there are relatively large differences between the two water-treatment systems and, hence, the fine details of the distribution functions can be overlooked.

One of the interesting findings is that drop-diameter distributions tend to be bimodal, as shown in **Fig. 5,** particularly where significant drop shearing occurs. There is currently debate in the literature as to the fundamental mechanisms that cause this bimodal distribution. One theory suggests that under high-shear conditions, very small drops are formed by the violent smashing of larger drops. Another theory suggests that small drops are less likely to coalesce than larger drops, and they get "left behind" because coalescence occurs downstream of the valve shear. In any case, bimodal distributions are often seen throughout the deepwater GOM, where valve shear is more pronounced, and to a lesser extent in the North Sea, where shearing is less of an issue. The impact of this bimodal drop-diameter distribution on oil-in-water separation is discussed further in the following subsections.

Modeling of Separation Equipment. The fluids in the liquid-settling zone of the vessel can be thought of as having three distinct zones. The uppermost zone is composed of an oil-continuous liquid that contains dispersed water drops. The water drops settle according to Stokes law. The bottommost zone is composed of a water-

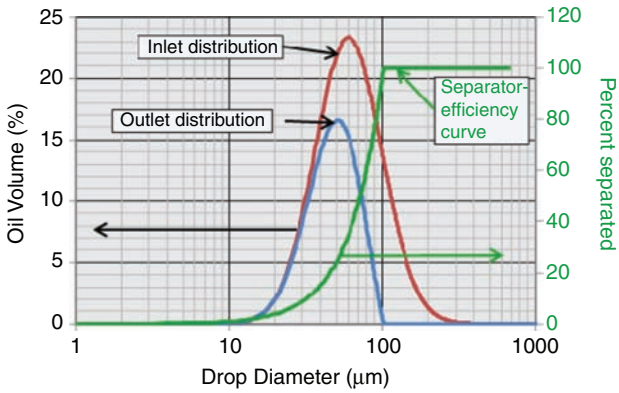

Fig. 6—Example of a separation-efficiency curve and its effect on the drop-diameter distribution. In this example, the separator efficiency curve is for a gravity separator, and is calculated with Stokes law. Note the sharp cutoff at 100 μm. This defines the D_{max}, the smallest drop for which there is 100% separation. In this example, the D_{max} is 100 μm.

continuous liquid that contains dispersed oil drops. The oil drops cream (rise to the top) according to Stokes law. Between these two layers, there is typically a dispersion zone (Polderman et al. 1997), where the transition between oil-continuous and water-continuous fluids takes place.

Stokes law is applied to model oil separation from water in the water leg of gravity-based separators. Stokes law gives the rate of rise of oil drops in water. The following equation is typically referred to as Stokes law:

$$u(d) = \frac{g(\rho_w - \rho_o)d^2}{18\mu}, \quad \text{.....(4)}$$

where $u(d)$ is the oil-drop rise velocity (m/s), a function of d; ρ_w is the density of the water phase (kg/m^3); ρ_o is the density of the oil phase (kg/m^3); d is the diameter of the oil drop (m); μ is the viscosity of the water (0.001 Pa·s = 0.001 N·s/m^2 = 1.0 cp); and g is the gravitational constant (9.81 m/s^2).

In a separator, the physical situation is the following. The bottom of the dispersion band defines the oil/water interface. The level of the oil/water interface is set by the operators and is detected and controlled by the vessel's level-control system. Under the dispersion band, water forms a continuous phase. Oil drops are dispersed within the water. The design intent in a separator is to provide a region of low turbulence, with parallel streamlines and uniform velocity, where oil drops can rise according to Stokes law. If oil drops rise fast enough, they will arrive at the oil/water interface and be carried over the spillover weir into the oil bucket and be discharged with the oil. Thus, the probability of separation is a function of the rise velocity, the residence time, and the height of the oil/water interface.

For a three-phase gravity separator, similar to that shown in Fig. 3, the separation efficiency can be calculated according to

$$S(d) = u(d)t_T/h, \quad \text{.....(5)}$$

where $S(d)$ is the separation efficiency as a function of the oil-drop diameter d; $u(d)$ is the oil-drop rise velocity (m/s), a function of d; t_T is the theoretical residence time (seconds), calculated as $t_T = V/Q$; h is the height of the oil/water interface (m); V is the volume of the water leg (m^3); and Q is the volumetric flow rate of water (m^3/s).

In Eq. 5, the separation efficiency is expressed as a fraction that varies between zero and unity. A value of unity represents complete separation, thus a value greater than unity is not physically possible. If the calculated $S(d)$ is greater than unity, then $S(d)$ is set equal to unity. An example of a separation-efficiency curve is given in **Fig. 6** (see the green line). According to Eqs. 4 and 5, the separation-efficiency curve for a gravity separator depends on the oil and water density, the water viscosity, the water residence time, and the volume and height of the water leg. Typically, however, it is expressed as a percentage, as shown in Fig. 6.

At this point, it is important to point out that there are a number of approximations implied in Eqs. 4 and 5 when these equations are applied to modeling gravity separators. These equations are only valid for an ideal set of conditions that almost never occur in practice. To account for real-world effects, the residence time is multiplied by a hydraulic efficiency factor that has been assigned a value of 0.7. This factor accounts for the following set of nonideal conditions. First, the actual residence time is a distribution function and not a single value. Part of the fluid follows a streamline from the inlet to the discharge. This fraction of fluid will have a short residence time. Another part of the fluid gets caught in swirls and eddies, with longer residence time. Internal devices, such as perforated plates, are intended to reduce such effects, but they typically do not eliminate them. Most separator vessels have formation sand in the bottom that reduces the volume available for residence time. Also, drop/drop coalescence is not treated explicitly. It has been observed that a hydraulic efficiency factor of 0.7 is reasonable.

The drop-diameter distribution and the oil concentration in the water phase discharged from the vessel are calculated as

$$F(d)_E = F(d)_F\left[1 - S(d)\right], \quad \text{.....(6)}$$

where $F(d)_E$ is the oil-drop-diameter distribution of the effluent and $F(d)_F$ is the oil-drop-diameter distribution of the feed.

In Fig. 6, the separation-efficiency curve is based on Stokes-law settling for oily water in a primary separator. The separation-efficiency curve for Stokes-law settling has a characteristic maximum drop diameter. In Fig. 6, this value is 100 μm. In general, this value depends on the residence time, fluid viscosity, and density difference between the oil and water (i.e., all of the Stokes-law variables). Note that, as shown in Fig. 6, the maximum drop diameter is 100 μm (green curve) and the outlet drop-diameter distribution (blue curve) has no oil drops of 100 μm or larger.

Other separation equipment can be modeled with Eq. 6, including hydrocyclones and flotation units. As discussed in the following, a modified version of Stokes law is applied to model hydrocyclones. In those cases, the separation-efficiency curve derived for the particular equipment would be used.

By use of the preceding approach, it is possible to calculate the oil-drop-diameter distribution at various points within the water-treatment system. Combining these tools allows a complete model for the water-treatment system. The final modeling tool combines information from these individual tools into a map of the performance of the system.

Inlet-Fluid Condition. The performance of a water-treatment system is greatly influenced by the processes upstream of the inlet separators. The condition of the inlet fluids (oil-in-water concentration and oil-drop size) has a major effect on the oil-drop-size distribution and, hence, on the performance of the oil/water-separation equipment. Upstream of the inlet separators, the fluids are subjected to shearing and coalescing processes because of the artificial-lift system, pipeline, riser, and valves. Both shearing and coalescence occur to a greater or lesser extent depending on the equipment, the flow rate, the temperature, and, ultimately, the intensity of the turbulence.

The turbulence intensity (turbulence-energy-dissipation rate) is well-defined (Hinze 1955; Zhou and Krest 1998; van der Zande et al. 1998, 1999). It is expressed in units of W/kg of fluid. A fluid pipeline has low turbulence intensity. When the turbulence intensity is low, the fluid motion promotes drop/drop collisions, which lead to coalescence. This is why in many cases the shearing effect of an electrical submersible pump is minimized by the time the

fluids reach the inlet separator. If the pipeline from the well to the separator is relatively long (greater than ¼ mile), then significant coalescence can occur. Arnold (1987) gives a general rule of 300 pipe diameters for the effect of oil-drop coalescence to occur. In the author's experience, this is a reasonable rule of thumb.

If, on the other hand, there is a boarding valve with only a short run of pipe between the valve discharge and the separator inlet, then fluids entering the separator will not have time to coalesce, and the fluids will have high oil-in-water concentration with small oil drops. Correlations exist to estimate the oil-drop diameter as a function of the turbulence intensity. The writing of Hinze (1955), though somewhat dated, provides physically intuitive insight about drop shearing because of turbulence. Steiner et al. (2006) provide a model for drop breakup that is more accurate and has a wider range of applicability than the original Hinze (1955) model.

While the preceding approach is valid for liquid-packed systems (i.e., two-phase oil/water flow), it cannot be used directly for three-phase flow (oil/water/gas). To the author's knowledge, the only viable means to estimate oil-drop size in three-phase flow is to use a two-step calculation with computational fluid dynamics (CFD). In the first step, CFD is used to model the three-phase flow. Once a suitable CFD model has converged, the CFD program is then used to calculate the energy-dissipation rate in the water phase. The energy-dissipation rate varies from one location to another. Each element of fluid will experience a range of energy dissipation for varying lengths of time. The calculated energy-dissipation rates are then used in a suitable correlation to estimate the oil-drop diameter. Example correlations are given by Hinze (1955), van der Zande et al. (1998, 1999), and Zhou and Kresta (1998). The time and effort required to gather the relevant system parameters, and to carry out such CFD calculations, is significant and was not used here.

Alternatively, as discussed by Arnold (1987) and Juniel (2007), empirical correlations can be used that are derived from extensive laboratory and field analysis. Such correlations provide a practical means for estimating the inlet-fluid condition. However, small details of piping configuration have a significant effect and cannot be taken into account easily.

All things considered, it is relatively difficult to predict accurately the inlet oil-drop-diameter distribution. Further, for the platforms studied in this paper, field data are almost nonexistent for inlet fluids. Special techniques are required to measure oil-drop distribution when the oil concentration is high, as is the case with inlet fluids.

Therefore, in the present work, the effect of an essentially unknown inlet-fluid condition was minimized with the following approach. Data were gathered for the fluid discharge of the inlet separators. This included oil concentration in the water phase and the oil-drop-diameter distribution in the water phase. In other words, the data gathering and modeling used here were focused on the oily water discharged from the inlet separators, rather than from the inlet to the separator. The oily-water discharge was the starting point for the analysis. A knowledge of residence time together with Stokes law was then used to back calculate the inlet-fluid condition. This was a far-more-practical approach than to attempt to predict the inlet-fluid condition. As discussed previously (see text following Eqs. 4 and 5), various approximations are involved in this modeling approach.

Stokes Factor. In this work, the Stokes factor is used to account for the properties of the fluids. The Stokes factor is defined as follows:

$$S = \frac{\rho_w - \rho_o}{\mu_w}, \quad \text{.....(7)}$$

where S is the Stokes factor (s/m^2), ρ_w is the density of the water (kg/m^3), ρ_o is the density of the oil (kg/m^3), and μ_w is the viscosity of the water (0.001 Pa·s = 0.001 N·s/m^2 = 1.0 cp). All of these properties are evaluated at process temperature, which is given in this paper whenever values of the Stokes factor are reported.

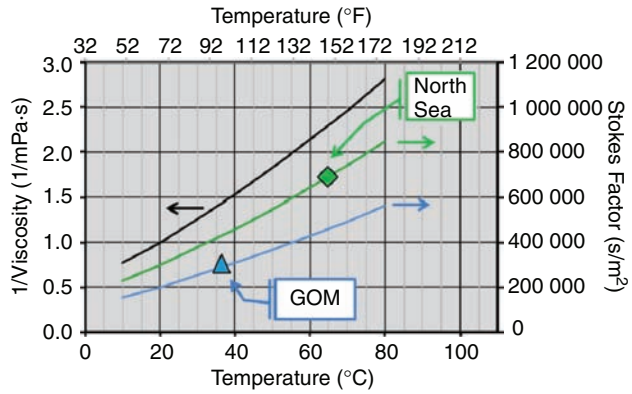

Fig. 7—The effect of water temperature on Stokes-law settling velocity, as given by 1/viscosity as a function of temperature.

In the following material, characteristic values are used for various parameters. It is obviously an overstatement that all North Sea or deepwater-GOM platforms can be characterized by single values of these parameters. As shown in the preceding, there is considerable variation from one platform to another.

The Stokes factor has the units of s/m^2. To calculate the rate of rise of oil drops, Stokes law can be used. In comparing Eq. 4 (Stokes law) with Eq. 7 (Stokes factor), it is apparent that the Stokes factor contains the fluid-property information (oil and water density and water viscosity). Because the Stokes factor is a function of the fluid densities and the water viscosity, it is a function of the fluid temperature. It is not dependent on the oil-drop size. Oil-drop size depends not only on fluid properties but also on the process configuration, including valves, pumps, and separators. The Stokes factor is used from this point onward to account for fluid density and water viscosity.

The effect of fluid properties, including temperature, on separation performance can be captured through calculation of the Stokes factor. In **Fig. 7,** the inverse of water viscosity ($1/\mu_w$) is given as a function of temperature. Also given is the Stokes factor as a function of temperature for an example crude-oil/water combination. For this illustration, the oil is assumed to have a gravity of 27°API (density 871 kg/m^3 at 60°F, 15.5°C), and the produced water is assumed to have a density of 1100 kg/m^3. For this calculation, the density of the oil and water are assumed not to change significantly with temperature. Only the viscosity of the water is assumed to vary with temperature. This is an illustrative calculation.

Water Residence Time vs. Stokes Factor. In designing a separator for oil/water separation, the geometrical dimensions of the vessel are determined from the flux rate required to resolve the dispersion band (Polderman et al. 1997) and the residence time required to perform initial oil dehydration and water deoiling. Together, these parameters determine the volume of the liquid section, the height of the oil/water interface, the height of the oil/gas interface, and the cross-sectional area of the liquid section of the vessel.

Within the dispersion band, there is a honeycomb pattern of relatively large drops of oil and water separated from each other by thin films of the other liquid. Thus, within the dispersion band, the separation of oil and water is driven by the mechanics of film drainage and buoyancy forces that cannot be modeled by Stokes law because of the nonisolated nature of the phases. From a macroscopic or continuum-mechanics standpoint, this process is characterized by flux (flow per unit area), rather than settling time or residence time. The most important property of the liquid is the oil viscosity because it controls the drainage rate of the liquid films between the large drops of water within the dispersion band. Separator cross-sectional area determines the capacity of the separator to resolve the dispersion band.

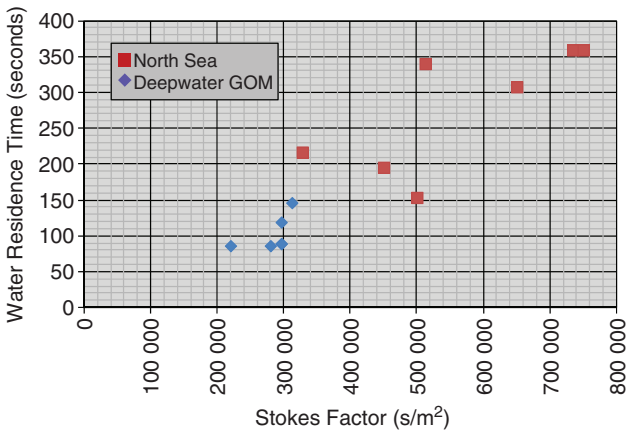

Fig. 8—Water-phase residence time vs. Stokes factor for North Sea and deepwater-GOM platforms.

The water section below the dispersion band is available for drops of oil to cream out (rise out) of the water phase. This later process is most appropriately modeled by Stokes law. The residence time and vessel geometry (height to normal interface level and normal liquid level) determine the capacity of the separator to provide initial deoiling of the water phase.

Fig. 8 gives the residence time vs. the Stokes factor for a number of North Sea and deepwater-GOM platforms. In all cases, the residence time is for the water phase in the first (most-upstream) three-phase separator in the system. In the case of the North Sea systems, this is the primary inlet separator. In the case of the deepwater-GOM systems, this is the free-water knockout, which is downstream of the high- and intermediate-pressure separators. Where there is an inlet heat exchanger, the discharge temperature is used. The residence time shown here is the so-called theoretical residence time defined by the volume of the water section divided by the volumetric flow rate of water. This is not an accurate measure of residence time. As discussed in the literature, the actual residence time is a distribution function that depends on the hydrodynamics of the vessel. In the modeling discussed in the following, we use a hydraulic efficiency factor to account for this.

Each point represents a facility at a given period in time. In some cases, a single platform will have more than one point in the figure to represent different flow rates and water cuts during the life of the platform. As water cut rises, which is a significant and consistent process in the North Sea, the water residence time has a tendency to decrease and the fluids become hotter. The facilities in the deepwater GOM have not experienced a significant increase in the water cut, at least not to the extent experienced by the facilities in the North Sea.

It is evident from these survey data that water residence time is generally two to three times greater in the North Sea compared with the deepwater GOM. Also, the Stokes factor has a wide range in the North Sea, but it is generally greater in the North Sea than in the deepwater GOM. An interesting point to note is that the lowest value of Stokes factor reported in the North Sea (320 000 s/m^2) is for the Gannet D field, which required multistage, horizontal induced-gas flotation. This point will be further discussed in the following subsections. These field data for Stokes factor and water residence time will be used in modeling the differences between the North Sea systems and the deepwater-GOM systems.

Hydrocyclone Modeling. Modeling of hydrocyclones is carried out with the framework given previously for separators (i.e., Eq. 6). In that equation, the outlet-drop-diameter distribution is equal to the product of the inlet-drop-diameter distribution times the quantity $[1 - S(d)]$, where $S(d)$ is the separation efficiency.

For the separation-efficiency curve of hydrocyclones, the migration-probability approach of Rietema (1961), Colman and Thew (1963), and Nezhati and Thew (1987) is used. The method was developed over some 20 years, starting in the early 1960s. Today, it is the basis of most commercial performance guarantees for hydrocyclones. The development started with Stokes law, written for a radially accelerating system:

$$u(d) = \frac{g(\rho_w - \rho_o)d^2}{18\mu}\left(\frac{V^2}{gr}\right), \quad \text{.....(8)}$$

where $u(d)$ is the oil-drop rise velocity (m/s), a function of oil-drop diameter d; ρ_w is the density of the water phase (kg/m^3); ρ_o is the density of the oil phase (kg/m^3); d is the diameter of the oil drop (m); μ is the viscosity of water phase (Pa·s = N·s/m^2); g is the gravitational constant (9.81 m/s^2); V is the radial velocity of fluid in the hydrocyclone (m/s); and r is the radial position in the hydrocyclone (m).

The quantity V^2/gr is a dimensionless number, referred to as the g-force. It gives the driving force for separation in a hydrocyclone. The g-force is not constant in a hydrocyclone. In fact, it varies as a function of flow rate, fluid temperature, radial position of fluid in the hydrocyclone, axial position, and of course, the hydrocyclone geometry. For most hydrocyclones in commercial application, the g-force has a maximum value of between 1,200 and 1,800. This means that the force acting on an oil drop is between 1,200 and 1,800 times the force of gravity, in a particular interior region of the hydrocyclone. This provides the tremendous separation power of a hydrocyclone.

By use of Eq. 8 in a trajectory analysis for oil drops inside the hydrocyclone, Rietema (1961) derived a quantity that has become known as the hydrocyclone number (Colman and Thew 1963; Nezhati and Thew 1987; Tulloch 1992):

$$N_{\text{Hy}} = \frac{Q_f \Delta\rho (d_{75})^2}{\mu D^3}, \quad \text{.....(9)}$$

where N_{Hy} is the hydrocyclone number (dimensionless), Q is the volumetric flow rate (m^3/s), $\Delta\rho$ is the density difference between water and oil (kg/m^3), d_{75} is the drop diameter for which 75% of drops are separated (m); μ is the viscosity of the water (Pa·s => kg/m·s), and D is the involute diameter of the cyclone (m).

The fact that the hydrocyclone number is dimensionless can be verified. The parameter d_{75} is key to this relationship. It specifies a particular drop diameter. More precisely, it is defined as the drop diameter for which 75% of the oil volume will be separated. The other 25% of oil volume is discharged in the effluent (product) water.

There was no particular reason that the value of 75% was chosen. Another value, of say 50%, could equally well have been chosen. In that case, the value of the hydrocyclone number would be different. Mathematically, any convenient value in the range of approximately 20 to 80% could have been chosen. It is a feature of hydrocyclones, however, that the 100%-separation value cannot be chosen. Note that there is no sharp cutoff at large drop sizes (cannot define a d_{100} because of the S-shape of the curve, as shown in **Fig. 9**).

As demonstrated by Rietema (1961), and verified by Colman and Thew (1963) and Nezhati and Thew (1987), the hydrocyclone number is only a weak function of the hydrocyclone Reynolds number. Without going into details, this suggests that it is primarily a function of hydrocyclone geometry. Thus, for a given hydrocyclone liner design, it is relatively constant and can therefore be used to predict performance over a range of operating conditions.

The particular equations used in this paper are based on the measurements carried out at the Orkney Water Treatment Center (Tulloch 1992). The hydrocyclone number is calculated with Eq. 9, for a given value of d_{75}. Separation efficiency is then calculated from the following empirical equation:

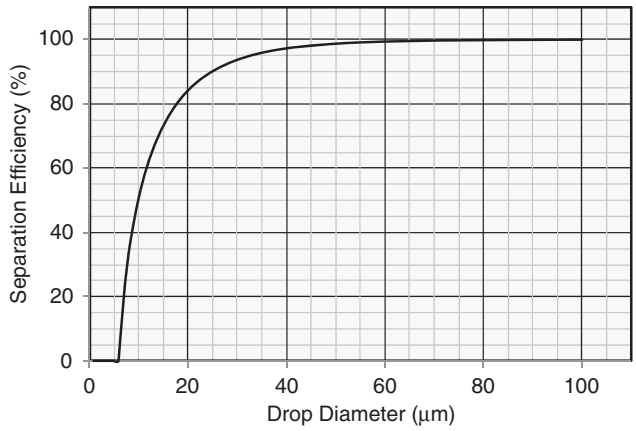

Fig. 9—Example of a separator efficiency curve for a hydrocyclone. Note that there is no sharp cutoff at large drop sizes (cannot define a d_{100} because of the S-shape of the curve).

$$S(d) = 1 - \exp\left[c_1\left(\tilde{d}_{75} - c_2\right)^{c_3}\right], \quad (10)$$

where $S(d)$ is the separation efficiency curve, as a function of drop diameter (fraction); $\tilde{d}_{75} = d/d_{75}$ and is the reduced drop diameter (dimensionless); and dimensionless parameters c_1, c_2, and c_3 are equal to –2.05, 0.39, and 0.75, respectively.

The value of d, and hence $S(d)$, is calculated from Eq. 10. A plot of $S(d)$ vs. d is given in Fig. 9. The performance (separation efficiency) given in the figure is characteristic of a commercial hydrocyclone liner such as the Vortoil (now Cameron) K-liner.

To summarize, several variables are taken into account in the model, including the forward flow rate as a function of the forward pressure drop. The magnitude of the centrifugal force is calculated with a dimensional and similarity analysis. Stokes law is used to calculate the speed at which an oil drop moves toward the core. Fluid properties, such as temperature, impact the separation in two ways—one is the impact on the Stokes-law calculation of drop-migration speed and the other is the impact on the development of swirl motion for a given pressure drop. This latter effect is crucial for an accurate understanding of hydrocyclone performance.

Flotation Modeling. Because flotation is required in the deepwater GOM to meet water-quality requirements, a flotation model is required. The author has developed a quantitative model for flotation performance as a function of the flotation type, gas rate, bubble diameter, and oil-drop diameter (Walsh and Tyrie 2011). However, such detail is not necessary here. Instead, a comparison of horizontal multistage flotation vs. single-stage vertical compact flotation is given in **Fig. 10.** As shown, for multistage flotation, separation efficiency (as indicated by vertical length) is quite high. The single-stage compact flotation achieves a lower separation efficiency. However, as shown, the inlet drop oil concentration for flotation, as deployed in the North Sea, is considerably lower than that in the GOM. Thus, low separation efficiency is not only adequate, it is considered prudent for this application because it saves capital cost.

Modeling Validation and Training Sets. Literature and field data were used to validate the modeling tools and to provide some additional understanding of the differences in the North Sea vs. deepwater systems, as shown in **Figs. 11 through 13.** Validation of the hydrocyclone model has been carried out in association with the original Orkney Water Treatment Center work. In that work, pilot systems were set up with four models of hydrocyclones. Oil concentration was measured in the feed, the effluent, and in the reject. The data were then used to curve fit the model parameters.

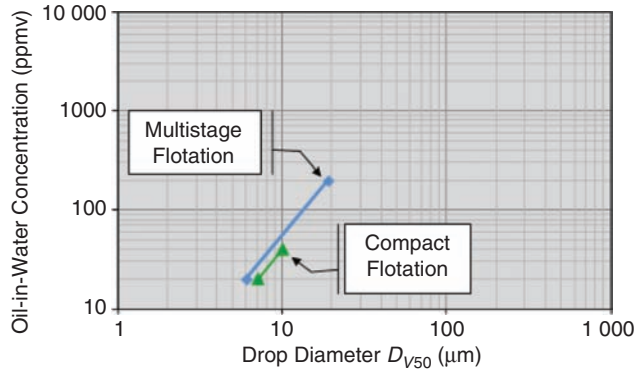

Fig. 10—Example of flotation performance. The length of the line provides an indication of the separation efficiency. Note that the inlet-drop-size distribution for the two systems is different. Both flotation units are typically installed downstream of a hydrocyclone. Multistage horizontal flotation is typically used in the deepwater GOM. Single- or double-stage vertical compact flotation is sufficient for many applications in the North Sea.

Modeling—Effect of Shear and Temperature. Two important differences between the North Sea and the deepwater-GOM systems are temperature of the fluids and shearing through the system. North Sea fluid temperatures are higher than those of the deepwater GOM. This is partly because of different reservoir temperatures. It is also partly because of the longer riser lengths in the deepwater GOM. Fluid temperature strongly affects primary separation. The higher the temperature, the lower the water viscosity. Lower viscosity gives faster oil-drop settling. The separation performance of both vessels and hydrocyclones benefits from higher temperature. But the important question is: How much of an effect does temperature have compared with other factors? Asked another way: Could temperature alone be responsible for the fact that most North Sea platforms do not require extensive flotation?

Shown in **Fig. 14a** are modeling results for the effect of hydrocyclone inlet-fluid temperature. The temperature range considered is rather large (36 to 72°C), but representative. In the modeling, the same drop-diameter distribution for the feed was used for both the hot fluid and the cold fluid, with the only difference being the fluid temperature. As shown by the length of the line, and by the final oil concentration, temperature has a dramatic effect.

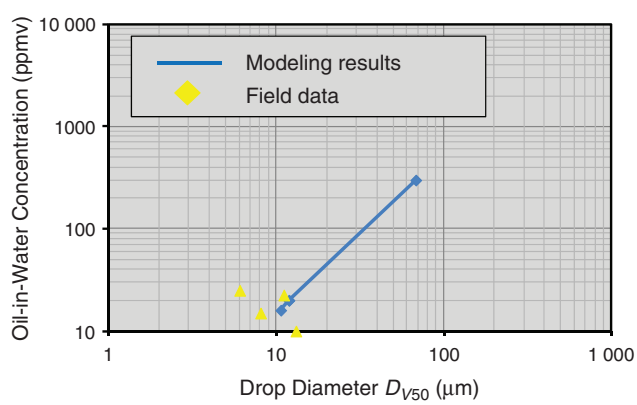

Fig. 11—Performance diagram for a hydrocyclone (and degassing vessel) operating at North Sea conditions, together with data from four North Sea platforms. The field data (yellow circle) were measured on the discharge from the degassing vessel. The modeling (blue points and line) are for hydrocyclone feed (upper right), hydrocyclone effluent, and degassing-vessel effluent (lower left).

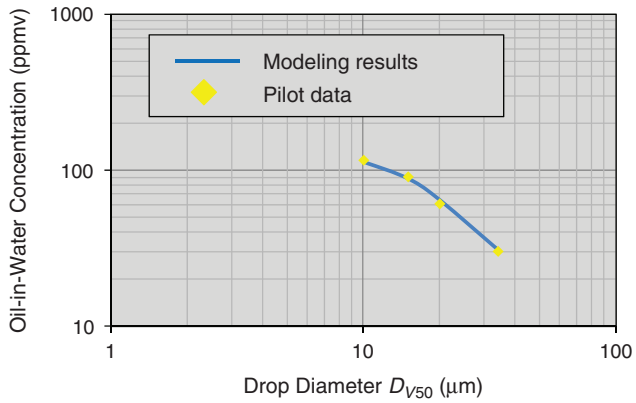

Fig. 12—Modeling and experimental data from Khatib (1996). In this case, the inlet-drop diameter was not reported. It was treated as a single adjustable parameter in the model. Thus, this data set does not provide a rigorous test of the model. However, because only one value of inlet drop diameter was used for all four measured data points, and all four measured outlet values were reproduced accurately, it does provide at least some indication that the model is accurate.

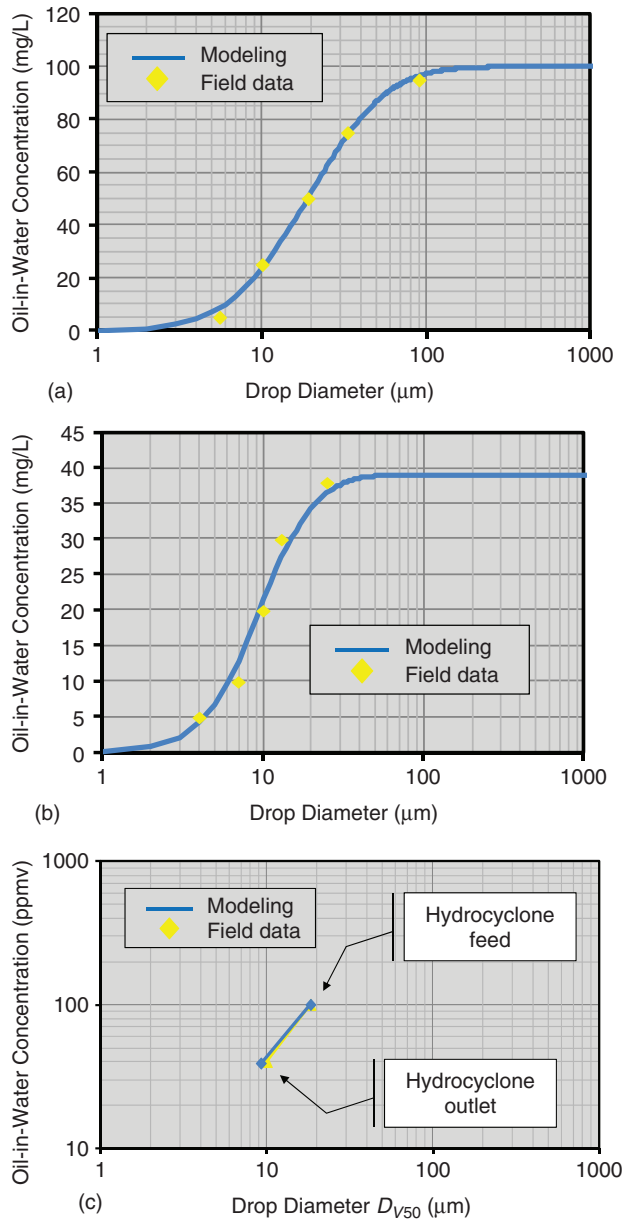

Fig. 13—(a) Hydrocyclone-inlet-measured drop-diameter distribution (yellow points) for the Gannet platform, together with a log-normal-distribution model (blue line). Good reproduction of the data is obtained by adjusting parameters in the log-normal distribution. (b) Outlet-measured drop-diameter distribution (yellow points) for the Gannet platform, together with model results for hydrocyclone performance (blue line). (c) Data and modeling results from (a) and (b) are used to plot a process-performance diagram. The hydrocyclone feed characteristics are entered into the model. The model then predicts the outlet characteristics. Good agreement between the model and measured data is obtained, as shown.

Another important variable is shearing. Shearing itself is not difficult to model. There are many variations of the Hinze (1955) model that give satisfactory estimates of drop diameter through valves. However, shearing alone is not enough. Together with shearing, drop/drop coalescence is an important associated mechanism that occurs both in the valve itself and in the piping downstream of the valve. Rather than model these effects explicitly, the net result of these mechanisms is considered. In other words, a range of drop diameters was considered as input to a hydrocyclone.

Shown in Fig. 14b are modeling results for the effect of smaller drop diameter, which represent the effect of shear. In this figure, only the cold fluid (T = 36°C) representative of the GOM was studied. The blue line in Fig. 14b is the same as the blue line in Fig. 14a (same temperature and same inlet-drop diameter).

A range of three average inlet-drop diameters is shown (30, 42, 58 μm, respectively). This is an entirely reasonable range of hydrocyclone inlet-drop diameters for the deepwater GOM. In this case, a dramatic shift in separation occurs as a function of inlet-drop diameter. As shown, smaller drop size because of shearing, together with colder temperatures, can be responsible for significant performance deterioration.

Hypothetical modeling has thus been used to compare the effect of temperature and drop shear. Admittedly, only a limited number of temperature and drop-size combinations have been presented. For example, warm fluid with small drops is not shown. This was done to keep the figures as simple as possible.

While it may appear that the conclusion of this modeling is that drop shear has a greater effect than temperature, this is not necessarily the case when a greater number of combinations is considered. For example, high temperature is capable of overcoming small drops to a fairly large extent. The conclusion of the author is that the two effects (temperature and shear) are of similar consequence. This is an important result. It suggests that the differences between North Sea water-separation processes are as much a result of process configuration as of fluid temperature. This is discussed in greater detail in the next subsection.

Process-Performance Diagram (PPD). Two of the most important diagrams that characterize a water-treatment system are the process-flow diagram (PFD) and the PPD. Whereas the PFD gives the process schematic, the PPD gives the process performance. In other words, the PFD shows the equipment selected, the process lineup, the reject routing, and all equipment and routing relevant to the system design. PFD examples are given in Figs. 1 and 2. The PPD gives the inlet oil-in-water concentration and oil-drop diameter (D_{V50}) for each important location within the process lineup. An illustrative PPD is shown in Fig. 15.

As discussed previously, there are various measures of oil-drop diameter that could be used in this figure. We have chosen here to use the D_{V50} value (volume average 50% value). In some cases,

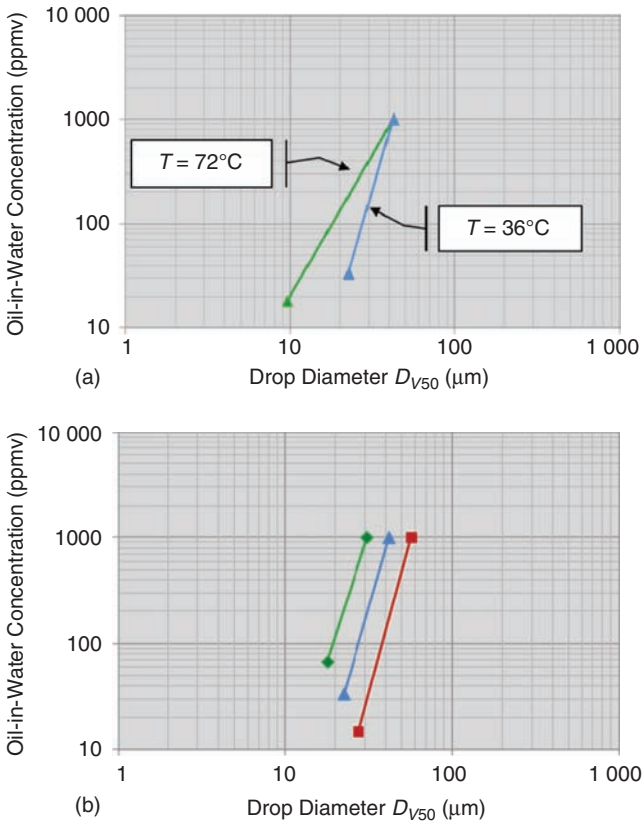

Fig. 14—(a) Modeling results for the effect of temperature on the performance of a hydrocyclone. (b) Modeling results for the effect of shear (smaller inlet-drop diameter) on the performance of a hydrocyclone. All three curves are for a fluid temperature of 36°C.

however, it is more appropriate to use the maximum drop diameter and not the entire drop-diameter distribution. In that case, the x-axis would be the D_{V95} value or D_{max}. In other cases, it is useful to use the D_{V10} drop diameter. This is used in cases in which a pronounced bimodal distribution is observed. In that case, it is important to track the small drops through the system.

The separation efficiency of each piece of equipment can be seen directly on the figure. The first point in the system represents the condition of the fluids upon entering the inlet separator. It is in the upper-left-hand side. As the fluids proceed through the system, both the D_{V50} oil-drop diameter and the oil-in-water concentration decrease. The final drop diameter and oil-in-water concentration are seen on the lower-left-hand side. The length of the line from one point to another is a measure of the separation efficiency of each piece of equipment. The inlet separator efficiency is given by the distance between the first two points (upper-right-hand side, and next point proceeding to the lower-left-hand side). The distance between the second and third points is a measure of the hydrocyclone separation efficiency.

Modeling Results. The modeling tools discussed in the preceding were applied to a general set of fluid conditions and properties. The input variables used are given in **Table 3.** It must be emphasized that these are generalized, or model, properties. Not all North Sea platforms are described accurately by these parameters. These parameters most accurately describe a moderate-gravity (°API) oil, in the Norwegian sector of the North Sea where the inlet fluids are relatively hot.

Both temperature and Stokes factor are given. For Stokes-law calculations, Stokes factor alone is sufficient. However, for the hydrocyclone calculations, both Stokes factor and water viscosity are required.

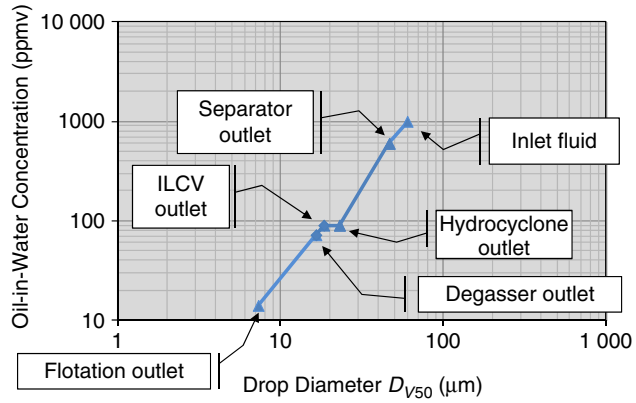

Fig. 15—PPD: This diagram is for a typical platform and is for illustrative purposes. The PFD has a three-phase separator, hydrocyclone, interface level-control valve (ILCV) downstream of the hydrocyclone, degasser vessel, and flotation unit.

As shown in **Fig. 16,** the inlet fluids in the deepwater-GOM model have smaller drops and contain more oil than the North Sea model. This is because of the higher pressure drop upstream of the primary separator.

Field data are represented in the figure by circles that cover a range of drop diameter and oil concentration. These field data were collected from several surveys of four platforms in the North Sea and three platforms in the deepwater GOM. These platforms were admittedly selected for the present paper because the equipment and process were operating within reasonable ranges of the design. In other words, problematic platforms were not selected for this study. In fact, Fig. 16 has been used by the author to help identify problematic platforms.

The separation efficiency of each piece of equipment, as calculated from the model, can be seen directly on the figure. The first point for each line (upper-right-hand side) represents the condition of the fluids upon entering the inlet separator. As the fluids proceed through the system, both the D_{V50} oil-drop diameter and the oil-in-water concentration decrease. The final drop diameter and oil-in-water concentration are seen on the lower left-hand side. The vertical drop from one point to another is a measure of the separation efficiency of each piece of equipment.

The efficiency of primary separation and hydrocyclones for the North Sea model is higher than that for the deepwater GOM model. The hydrocyclone effluent for the North Sea model hydrocyclone has a D_{V50} of 10 μm. This is similar to that of the hydrocyclone for the deepwater-GOM model, which is 12 μm. This difference is because of the higher temperature fluids in the North Sea, which allows the hydrocyclone to separate smaller drops. As discussed previously, the separation efficiency of the model's flotation unit is given by empirical data from the deepwater GOM. As shown, flotation is required for the deepwater-GOM model fluid, but not for the North Sea model fluid.

Parameter	North Sea	Deepwater GOM	Units
Stokes factor	600 000	300 000	s/m^2
Separator residence time	300	120	seconds
Temperature	70	35	°C
Inlet pressure drop	2	10	bar
Water cut	25	25	%

Table 3—Modeling input variables.

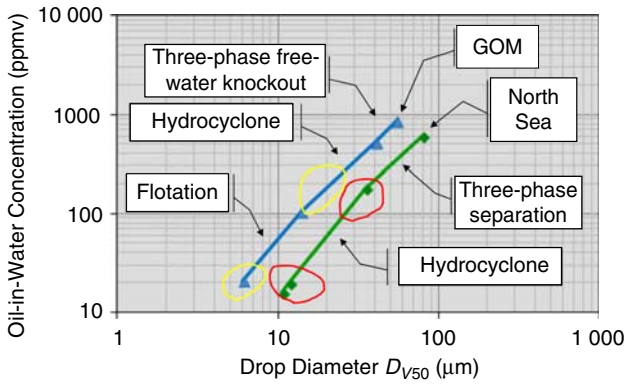

Fig. 16—Process-performance diagram for platforms in the North Sea (green and red) and GOM (blue and yellow). The green points and line are modeling results for North Sea platforms. The red circles are from platform measurements for four North Sea platforms. The blue points and line are modeling results for deepwater-GOM platforms. The yellow circles are from platform measurements for the Mars, Auger, and Ursa platforms from approximately 2001 to 2007.

Altogether, the modeling reproduces the observations made in the field. That is, in those North Sea facilities where there is minimum drop shear in the boarding system, and where the primary separators have hydrocyclones, drop size is maintained and good separation efficiency is achieved without the requirement of a large flotation unit.

Discussion

Two approaches are used to understand why water-treatment systems in the North Sea differ from those in the deepwater Gulf of Mexico (GOM). The first approach is to compare the systems to best practices in water-treatment-system design and to consider the reasons for deviation from the best practices. This was done in the companion paper by Walsh and Georgie (2012). Factors that account for this deviation include capital and operating costs, extraction techniques, reservoir characteristics, the properties of the fluids being treated, the target specifications, and the obvious differences in platform type (fixed structure in shallow water vs. floating structure in deep water).

The second approach presented in this paper is to apply modeling tools and to compare the modeling data with field data. Modeling the two systems (North Sea and deepwater GOM) was fairly challenging. The modeling tools rely on input data such as fluid properties, flow rates, equipment type and size, and process lineup. The tools provide estimates of drop-size distribution and oil-in-water concentration throughout the system. As applied here, the modeling tools provide a quantitative estimate of the relative importance of various factors that differentiate the systems in the two regions (such as inlet fluid shear and temperature, separator flux rate, residence time, and application of hydrocyclones).

As discussed, the use of two-phase high-pressure and intermediate-pressure vessels has the consequence that a hydrocyclone cannot be used and that the liquids containing both oil and water are sheared extensively. From the modeling results, it appears that such shearing is partly responsible for the need to use large, multistage horizontal flotation units. Thus, the use of two-phase inlet separators, which are significantly smaller and weigh less than their corresponding three-phase counterparts, comes at a price. The price is the requirement to use a large, multistage flotation unit for water treatment. The question is whether or not there is a net space and weight saving.

A Wemco is a six-chamber horizontal flotation unit with four active cells. A Wemco unit that can process approximately 20,000 BWPD weighs approximately 30 tons wet weight, and operates with close to 6 minutes of retention time. It does occupy considerable space, but, because it operates at a low pressure, the wall thickness is low and the steel weight is only approximately one-half of the weight of the unit. The other weight component is the water itself.

A typical two-phase high-pressure separator in the deepwater GOM weighs roughly 60 to 80 tons (operating weight), depending on the capacity. For example, the two-phase high-pressure separator on the Mars platform has 4-in.-thick steel walls and a liquid residence time of approximately 54 seconds. It is 72 in. in diameter and is 28 ft long (seam to seam). It has an operating weight of 65 tons (60 metric tons). Because it is a two-phase separator, it is only required to separate gas and liquid. Given the density difference between liquid and gas, a short residence time is sufficient.

If the high-pressure separator had been designed as a three-phase vessel with 5 minutes of residence time for liquid, it would weigh at least five times more than the typical high-pressure deepwater GOM separator, in the range of 300 to 400 tons. Thus, there is tremendous weight and space saving through the use of two-phase separation, even though a large flotation unit is required as a consequence.

Also, most high-pressure fluids are relatively dry. Such fluids are typically drained from a reservoir upon initial production. It is only after the initial production that water content tends to increase. Thus, the decision to design high-pressure and intermediate-pressure separators in the deepwater GOM as small two-phase separators is essentially a reasonable way to economize on weight and space. Thus, the typical deepwater GOM water-treatment-system design appears to be justified from a holistic or whole-process perspective.

Summary and Conclusions

In this paper, together with the companion paper by Walsh and Georgie (2012), water-treatment differences between North Sea and deepwater Gulf of Mexico (GOM) platforms are analyzed. The scope of the analysis covers flow-assurance strategies, chemical-treatment programs, available separation technologies (gravity settling, hydrocyclones, and flotation), and process configuration. Both field data and modeling results are presented to explain why three-phase separators and hydrocyclones are used widely in the North Sea, while two-phase separators and multistage flotation units are applied in the deepwater GOM.

The present paper focuses mostly on fluid characteristics (such as temperature), equipment (two-phase vs. three-phase separators, hydrocyclones, and flotation units), and process configuration (as characterized by the process-performance diagram). The differences can be summarized as follows:

- North Sea
  - Warmer fluids (lower water viscosity)
  - Heat added upstream
  - Less-costly weight and space (shallow, no hurricanes)
  - Three-phase primary separation (with a hydrocyclone on each water discharge)
  - Hydrocyclones on all primary separators
  - No flotation required or just compact flotation required
- Deepwater GOM
  - Cooler fluids (higher viscosity)
  - Heat added downstream
  - Weight and space expensive (deep water, hurricanes)
  - Two-phase/short-residence-time primary separation
  - Hydrocyclones used wherever possible (free-water knockout)
  - Large, horizontal four-stage flotation required

Both regions use a staged or cascaded pressure-reduction system in which fluids are routed through successively lower-pressure separators in series. This maximizes liquid recovery and minimizes overall load on the gas-compression system. There is an obvious and sensible overall design, and this is not the subject of this paper. Both the North Sea and the deepwater GOM are similar in this respect.

Both regions appear to make use of the best-available technology within the regional constraint of the cost of weight and space and fluid characteristics. The designers of North Sea platforms chose to use three-phase separators together with hydrocyclones on the water discharge of each separator. This was a judicious design choice, given the availability of space and weight.

On the other hand, the designers of deepwater-GOM platforms made the choice to use two-phase inlet separators because of the very high cost of weight and space. In doing so, a judicious tradeoff was made. Oil/water separation does not occur until late in the separation process, which subjects the oil and water to intense shearing. This requires more-robust water treatment at the back end of the facility, such as horizontal multistage flotation. Given that flotation is a low-pressure process, the weight of the added steel from such a large flotation unit is small compared with the weight savings of two-phase primary separation. Thus, the typical deepwater-GOM water-treatment-system design appears to be justified from a holistic or whole-process perspective.

Modeling tools are presented that can correlate laboratory, pilot, and field data. High-quality field data on drop-size distribution, together with relevant process information, are scarce. Benchmark data sets are needed. Therefore, in this paper, modeling is used to supplement the field data.

The modeling tools show that inlet-fluid shearing is at least as important as fluid temperature in determining the required separation equipment. Inlet-fluid shearing is greater in the GOM because of the inlet two-phase separators and their level-control valves. Thus, the fluids entering the platform and the fluids entering the first three-phase separator (free-water knockout) have higher oil concentration and smaller oil-drop diameter. The separator residence time is shorter than in the North Sea. The fluid temperature is lower as well. All these factors combine to provide a relatively lower performance in the hydrocyclones, and thus multistage flotation is required even though multistage flotation is heavier and occupies more space than the compact vertical flotation used in the North Sea.

It is only through a whole-process analysis, as demonstrated here, that the justification for such an approach can be quantified. The choice of two-phase inlet separators in the deepwater GOM is an economic decision that, as discussed in the paper, is judicious given the relative dryness of the fluids and the high cost of installing three-phase inlet separators in deepwater systems.

Not all of the systems evaluated by the author are shown in this paper. There are some systems in the North Sea that have characteristics that are similar to those in the deepwater GOM. Also, there are systems in the deepwater GOM for which shearing creates water-treatment problems. As in any survey of water-treatment systems, there are exceptions to the general observations. By use of the modeling tools presented in this paper, identification of these cases is more straightforward. This has the advantage of helping to guide troubleshooting efforts, and it helps justify the expenditure of capital to rectify these problems.

Nomenclature

c_1 = dimensionless parameter = –2.05
c_2 = dimensionless parameter = 0.39
c_3 = dimensionless parameter = 0.75
d = diameter of the oil drop, m
d_{75} = drop diameter for which 75% of drops are separated, m
D = involute diameter of the cyclone, m
D_{max} = maximum oil-drop diameter
$f(x)$ = the probability distribution of x values
$F(d)_E$ = oil-drop-diameter distribution of the effluent
$F(d)_F$ = oil-drop-diameter distribution of the feed
g = gravitational constant (9.81 m/s^2)
h = height of the oil/water interface, m
Q = volumetric flow rate of water, m^3/s
r = radial position in the hydrocyclone, m
S = Stokes factor, s/m^2
$S(d)$ = separation efficiency as a function of the oil-drop diameter d
t_T = theoretical residence time (seconds), calculated as $t_T = V/Q$
$u(d)$ = oil-drop rise velocity as a function of d, m/s
V = volume of the water leg, m^3
V = radial velocity of fluid in the hydrocyclone, m/s
x = independent variable (e.g., drop diameter)
α = adjustable parameter
β = adjustable parameter
$\Delta\rho$ = density difference between water and oil, kg/m^3
μ = viscosity
μ_w = viscosity of the water (0.001 Pa·s = 0.001 N·s/m^2 = 1.0 cp)
ρ_o = density of the oil phase, kg/m^3
ρ_w = density of the water phase, kg/m^3

Acknowledgments

The authors wish to thank Peggy Lane, Colin Tyrie, Doug McCammon, and Charles Petty for helpful discussions, particularly during the Produced Water Society meetings of the past several years.

References

Arnold, K.E. 1987. Surface Facilities for Waterflooding and Saltwater Disposal. In *Petroleum Engineers Handbook*, ed. H.B. Bradley, Chap. 15. Richardson, Texas: Society of Petroleum Engineers. SPE-1987-15-PEH. https://www.onepetro.org/download/book/peh/spe-1987-15-peh?id=book%2Fpeh%2Fspe-1987-15-peh.

Bothamley, M. 2004. Offshore Processing Options for Oil Platforms. Presented at the SPE Annual Technical Conference and Exhibition, Houston, 26–29 September. SPE-90325-MS. http://dx.doi.org/10.2118/90325-MS.

Brown, W.K. and Wohletz, K.H. 1995. Derivation of the Weibull Distribution Based on Physical Principles and its Connection to the Rosin-Rammler and Lognormal Distributions. *J. App. Phys.* **78** (4): 2758–2763. http://dx.doi.org/10.1063/1.360073.

Colman, D.A. and Thew, M.T. 1963. Correlation of Separation Results from Light Dispersion Hydrocyclones. *Chem. Eng. Res. Des.* **61** (July 1963).

Hinze, J.O. 1955. Fundamentals of the Hydrodynamic Mechanism of Splitting in Dispersion Processes. *AIChE J.* **1** (3): 289–295. http://dx.doi.org/10.1002/aic.690010303.

Juniel, K. 2007. Water Treating Facilities in Oil and Gas Operations. In *Petroleum Engineering Handbook*, *Volume III-Facilities and Construction Engineering*, ed. K.E. Arnold, Ed. in Chief L.W. Lake, Chapter 4. Richardson, Texas: Society of Petroleum Engineers.

Khatib, Z.I. 1996. Handling, Treatment, and Disposal of Produced Water in the Offshore Oil Industry. Presented at the SPE Annual Technical Conference and Exhibition, New Orleans, 27–30 September. SPE-48992-MS. http://dx.doi.org/10.2118/48992-MS.

Nezhati, K. and Thew, M.T. 1987. Aspects of the Performance and Scaling of Hydrocyclones for Use with Light Dispersions. Paper presented at the 3rd International Conference on Hydrocyclones, Oxford, England.

Polderman, H.G., Bouma, J.S., and van der Poel, H. 1997. Design Rules for Dehydration Tanks and Separator Vessels. Presented at the SPE Annual Technical Conference and Exhibition, 5–8 October, San Antonio, Texas. SPE-38816-MS.http://dx.doi.org/10.2118/38816-MS.

Rietema, K. 1961. Performance and Design of Hydrocyclones – III: Separating Power of the Hydrocyclone. *Chem. Eng. Sci.* **15** (3-4): 310–319. http://dx.doi.org/10.1016/0009-2509(61)85035-5.

Steiner, H., Teppner, R., Brenn, G. et al. 2006. Numerical Simulation and Experimental Study of Emulsion in a Narrow-Gap Homogenizer. *Chem. Eng. Sci.* **61** (17) 5841–5855. http://dx.doi.org/10.1016/j.ces.2006.04.016.

Tulloch, S.J. 1992. Comparative Testing of New Generation Deoiling Hydrocyclones by Orkney Water Test Center Ltd, December 1991–April 1992. Project No.: OWTC/91/122, Document No.: R122-16B.

van der Zande, M.J., Muntinga, J.H., and van den Broek, W.M.G.T. 1998. Emulsification of Production Fluids in the Choke Valve. Presented at the SPE Annual Technical Conference and Exhibition, New Orleans, 27–30 September. SPE-49173-MS. http://dx.doi.org/10.2118/49173-MS.

van der Zande, M.J., van Heuven, K.R, Muntinga, J.H. et al. 1999. Effect of Flow Through a Choke Valve on Emulsion Stability. Presented at the SPE Annual Technical Conference and Exhibition, Houston, 3–6 October. SPE-56640-MS. http://dx.doi.org/10.2118/56640-MS.

Walsh, J.M. and Frankiewicz, T.C. 2010. Treating Produced Water on Deepwater Platforms: Developing Effective Practices Based Upon Lessons Learned. Presented at the SPE Annual Technical Conference and Exhibition, Florence, Italy, 19–22 September. SPE-134505-MS. http://dx.doi.org/10.2118/134505-MS.

Walsh, J.M. and Georgie, W.J. 2012. Produced Water Treating Systems – Comparison Between North Sea and Deepwater Gulf of Mexico. Presented at the SPE Annual Technical Conference and Exhibition, San Antonio, Texas, 8–10 October. SPE-159713-MS. http://dx.doi.org/10.2118/159713-MS.

Walsh, J.M. and Tyrie, C. 2011. Gas Flotation Technology. Presented at the 21st Annual Produced Water Seminar, Houston, 18–20 January.

Zhou, G. and Kresta, S.M. 1998. Correlation of Mean Drop Size and Minimum Drop Size with the Turbulence Energy Dissipation and the Flow in an Agitated Tank. *Chem. Eng. Sci.* **53** (11): 2063–2079. http://dx.doi.org/10.1016/S0009-2509(97)00438-7.

John Walsh is the Director of Consulting Services at CETCO Energy Services. Before CETCO, he worked at GHD Consultants in Brisbane, Australia, and as the Shell Global subject-matter expert in produced-water treatment. With Shell, Walsh provided troubleshooting and design support to projects in 14 countries over a 20-year career. He is currently the instructor for the SPE course on Water Treatment and is a member of the Editorial Board of *Oil and Gas Facilities*. Walsh previously served on the SPE Board of Directors, and currently sits on the Board of Directors of the Produced Water Society.