SPE DISTINGUISHED LECTURER

Primary funding is provided by

The SPE Foundation through member donations and a contribution from Offshore Europe

The Society is grateful to those companies that allow their professionals to serve as lecturers.

Additional support provided by AIME

Society of Petroleum Engineers
Distinguished Lecturer Program
www.spe.org/dl

SPE DISTINGUISHED LECTURER

Liner Drilling: A Simple Solution to Complex Drilling Challenges

Steve Rosenberg
Global Business Director – Drilling Engineering
Weatherford

Society of Petroleum Engineers
Distinguished Lecturer Program
www.spe.org/dl

Outline

- What is liner drilling?
- Why liner drilling?
- Liner drilling applications
- Liner drilling systems
- Engineering considerations
- Case histories
- Summary

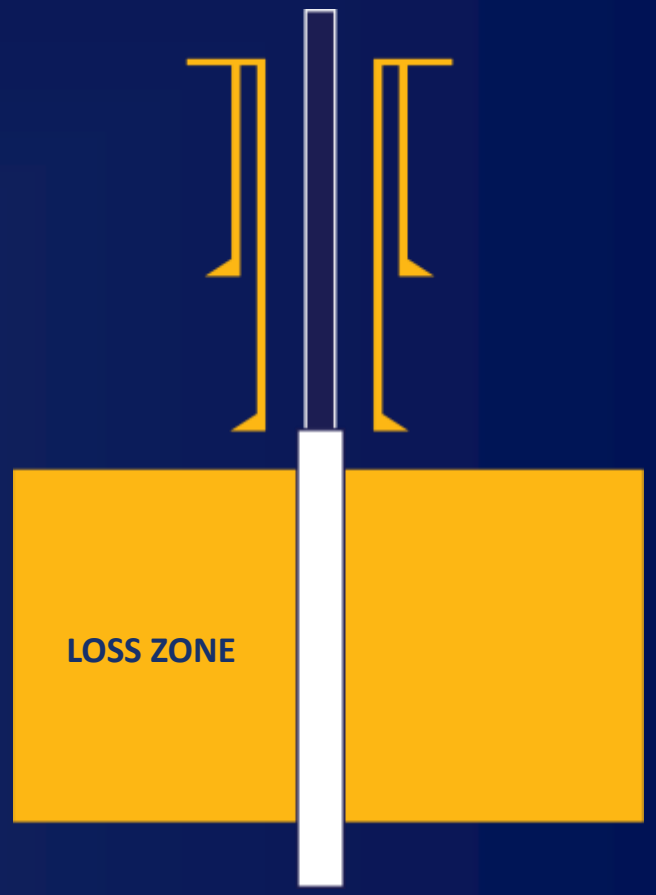

What is Liner Drilling?

- Liner replaces the conventional BHA*
- Provides hydraulic energy to bit.
- Provides mechanical force to the bit
- **Liner drills and cases well in single trip**

*Bottom Hole Assembly

Liner System Basics

- Casing string set below the wellhead.
- Can be set on bottom
- Can be hung off with liner hanger assembly.
- Many configurations to meet well demands.
- Cemented or uncemented.

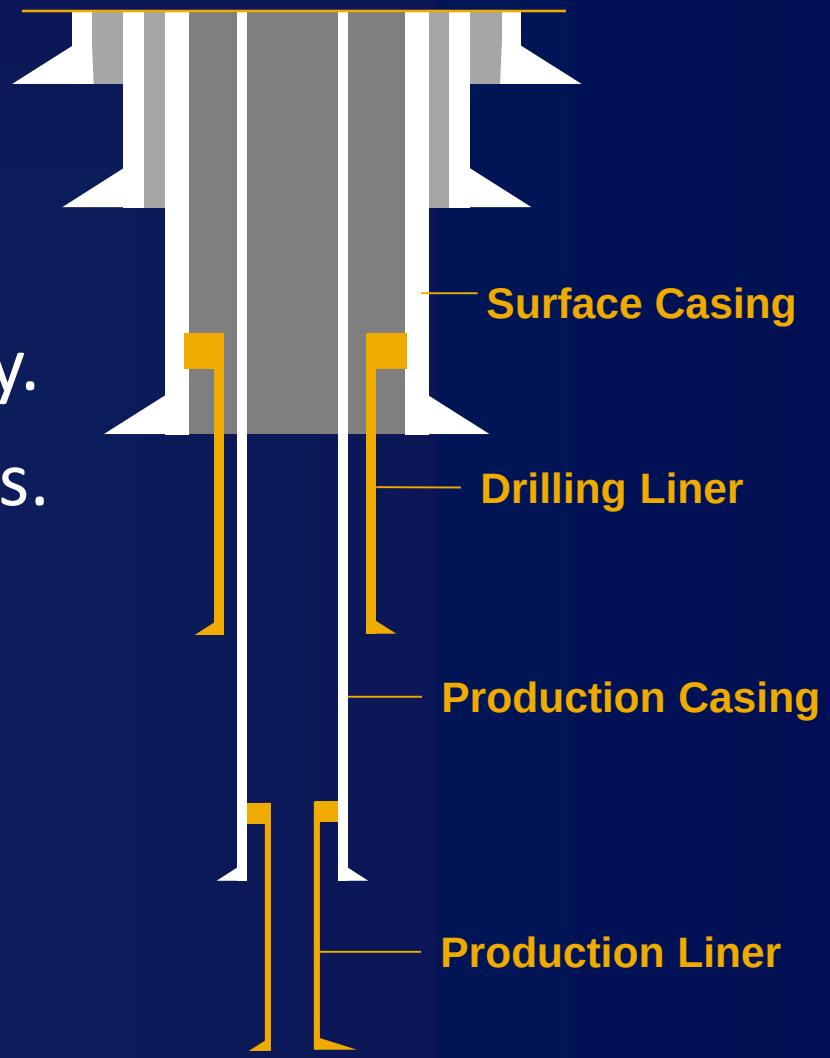

Liner Drilling - A Simple Solution

SPE DISTINGUISHED LECTURER

Liner drilling is very similar to conventional drilling methods in that the liner ***is the BHA.***

Liner drilling ***success*** is determined by how the liner BHA and wellbore ***are managed.***

Why Liner Drilling?

- Get liner to total depth
- Mitigate:
  - Losses
  - Wellbore instability
  - Depletion
  - Pressure transition intervals
- Keep every foot drilled
- No rig modifications
- **One trip to drill and case**

Non-Retrievable Liner Drilling Systems

- Simplest and most common
- Ability to cement when reaching total depth (TD)
- Inability to change direction
- Cased-hole logs

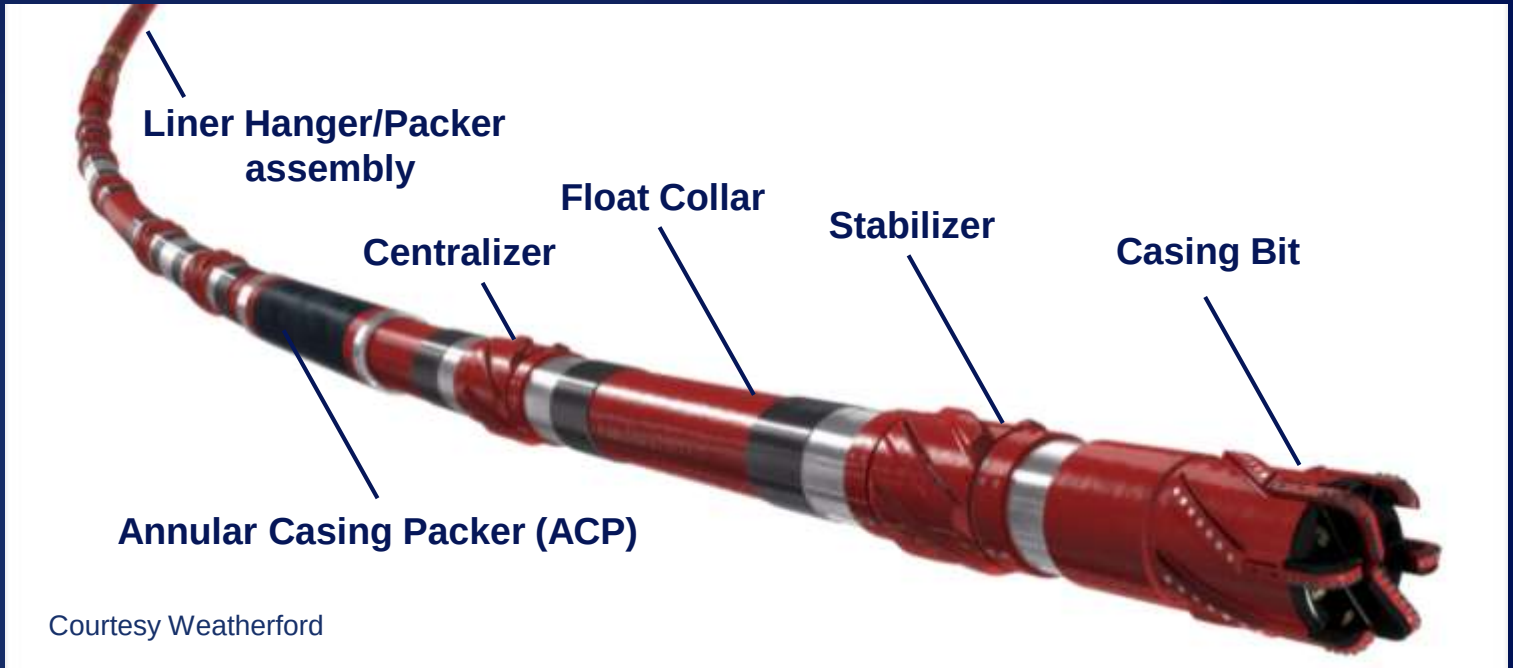

Courtesy Weatherford

Retrievable Liner Drilling Systems

- Directional drilling capability
- Logging while drilling
- Multiple trip capability
- Unable to cement when reaching TD

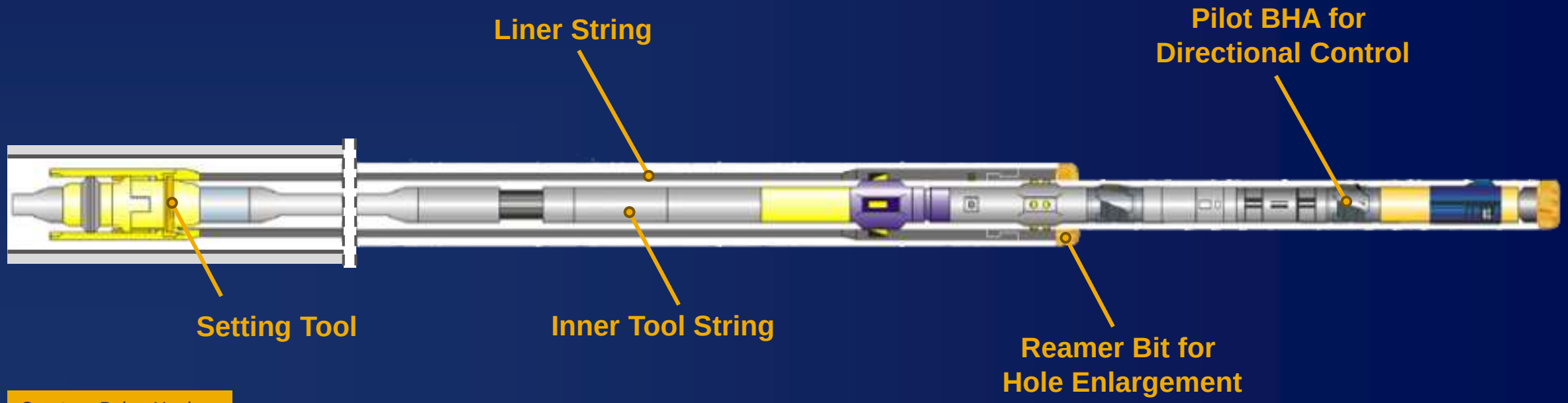

Courtesy Baker Hughes

Connection Design for Liner Drilling

- ✓ Proven in liner drilling or casing drilling applications
- ✓ High resistance to compression, bending, and tensile loads
- ✓ High resistance to cyclic fatigue
- ✓ High torsional resistance
- ✓ Economic considerations
- ✓ **Ensure connection integrity**

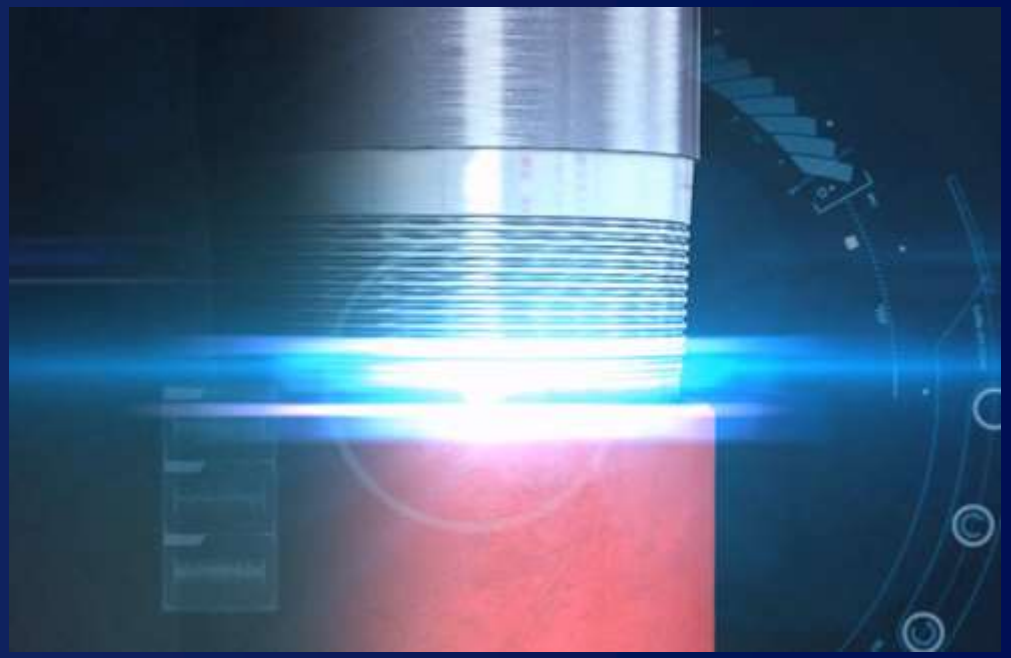

Liner Drilling Systems Design Considerations

- Directional control requirement?
- Hanger and/or packer requirement?
- How will these affect liner drilling operation?
  - Hydraulic bypass area?
  - Setting sequence?
- Is hanger setting system pressure balanced?

Liner Drilling Float Equipment

- Float collars (multiple valves)
- Poppet-valve float collar preferred
- Shoe-track requirement dictates spacing

Poppet Valve
Float Collar

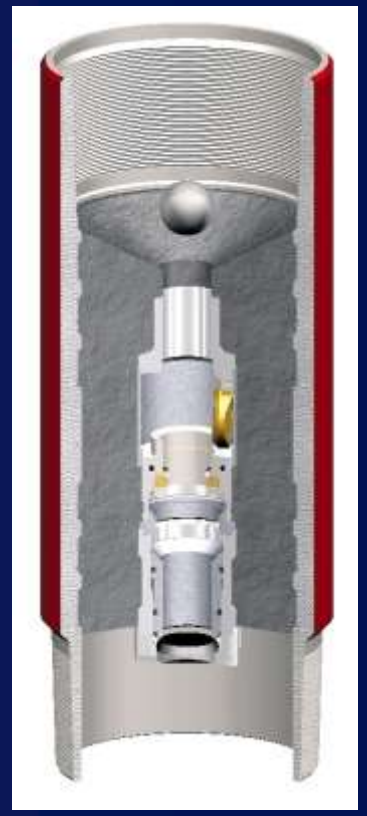

Auto Fill
Float Collar

Centralizers and Stabilizers for Liner Drilling

- Solid body centralizers with non-welded blades
- Thermal spray centralizers for tight clearances
- Centralizer and stabilizer subs

Thermal Spray Centralizers

Solid Body Centralizer

Drilling Fluid and Cementing Design

- Lost circulation material compatibility
- Cementing wiper plug system
- Single- or multi-stage cementing
- Mechanical - or RFID*-enabled intervention

*Radio-Frequency Identification

Drillable PDC* Casing Bits for Liner Drilling

Aluminum and Steel Construction

Courtesy Weatherford

Steel Alloy Construction

Courtesy Baker Hughes

**Polycrystalline Diamond Compact*

Liner Drilling Engineering Matrix

SPE DISTINGUISHED LECTURER

ENGINEERING CONSTRAINTS

		Hydraulic Loading	Mechanical Loading	Torque and Drag	Helical Buckling	Cyclic Stress Fatigue	Hole Trajectory	Vibration
LINER DESIGN	Operating Parameters							
	Pipe Properties							
	Connection Design							
	Setting System							
*OPS CONSTRAINTS	WOB*							
	RPM*							
	Flow Rate							
	Stand Pipe Pressure							

*Operations *Weight On Bit *Revolutions Per Minute

High Island – Gulf of Mexico (GoM) Shelf

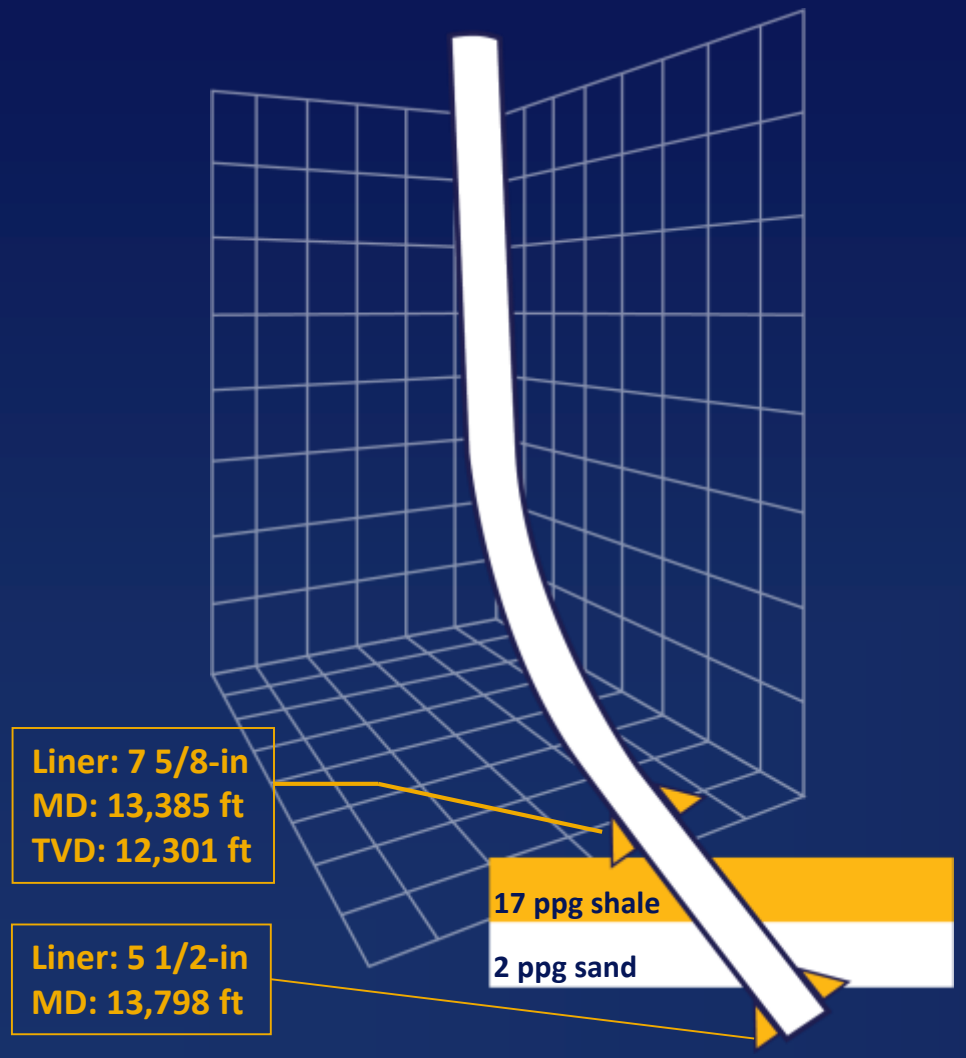

Objectives/Results:

- Isolate 17-ppg pressured shale and 2-ppg sand
- Conventional methods resulted in stuck pipe
- Exceed 6 1/2-in. hole conventional drilling limits
- 5 1/2-in. liner reamed and drilled-in 113 feet
- Isolated 2-ppg sand and 17-ppg shale
- Saved 3 ½-in. completion system

Mississippi Canyon, Deepwater GoM

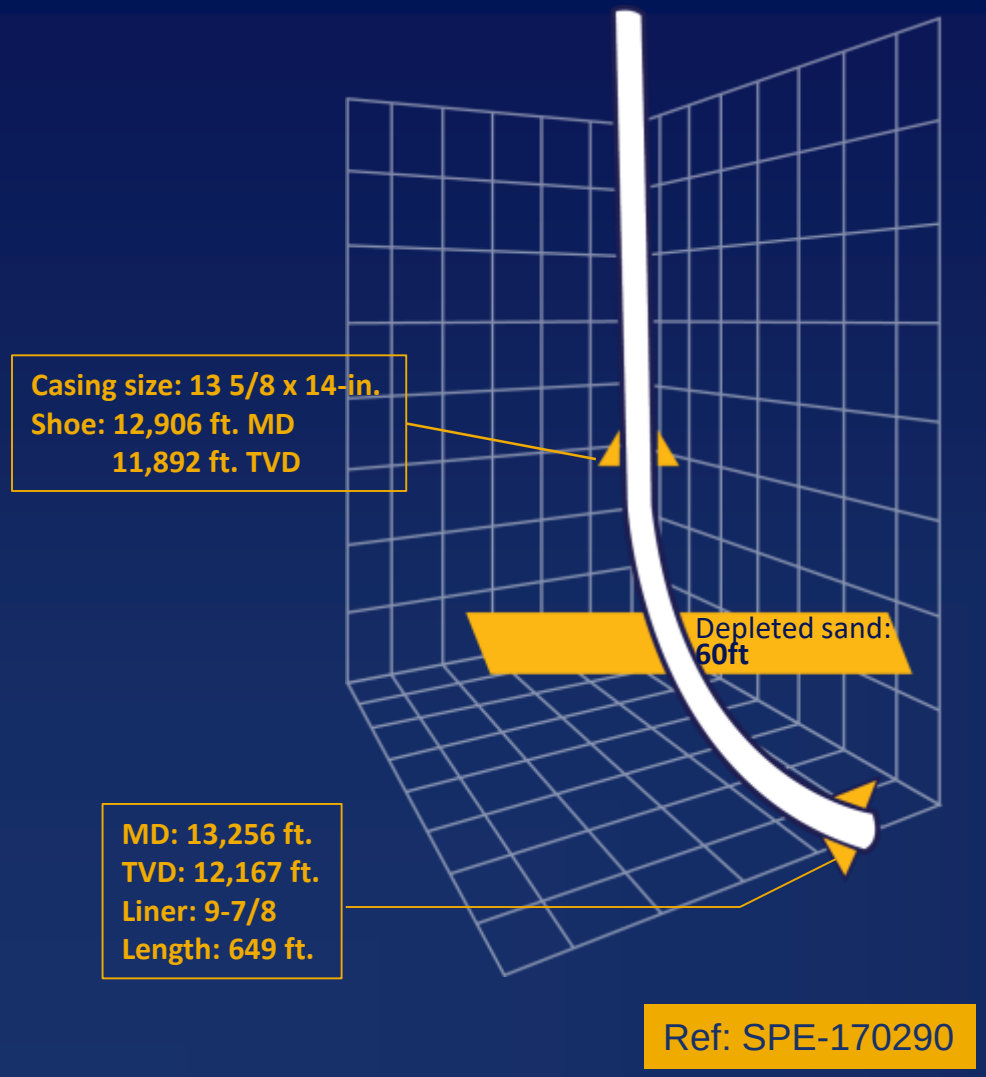

Ref: SPE-170290

Objectives/Results:

- Isolate 60-ft. depleted sand with 9-7/8-in. liner
- 6.5 ppg pore pressure - catastrophic losses likely
- 9 7/8-in. liner drilled 306 feet with total losses
- 9 7/8-in. x 14-in. annulus kept full
- Isolated depleted sand
- Maintain 36° inclination over 306-ft. interval

Romania Land Application

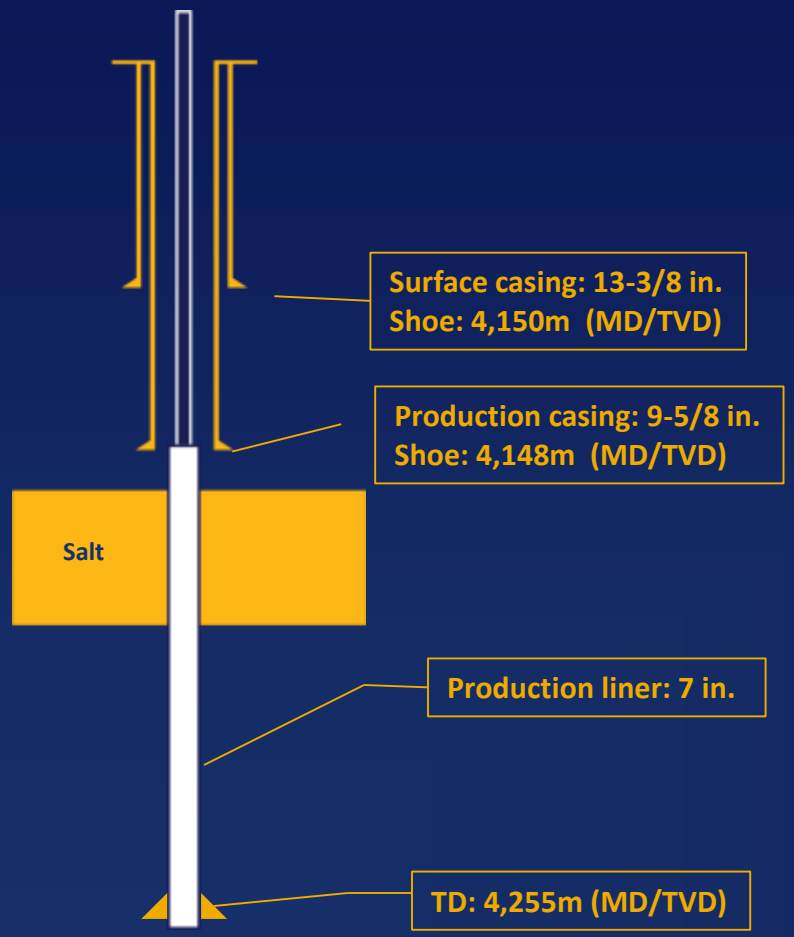

Ref: SPE 184626

Objectives/Results:

- Isolate a salt creep interval with 7-in. liner
- Salt movement prevented liner installation
- Conventional methods resulted in 3 sidetracks
- 7-in. liner was drilled in 17 meters through salt
- 8m salt section isolated with 7-in. liner

Offshore Indonesia

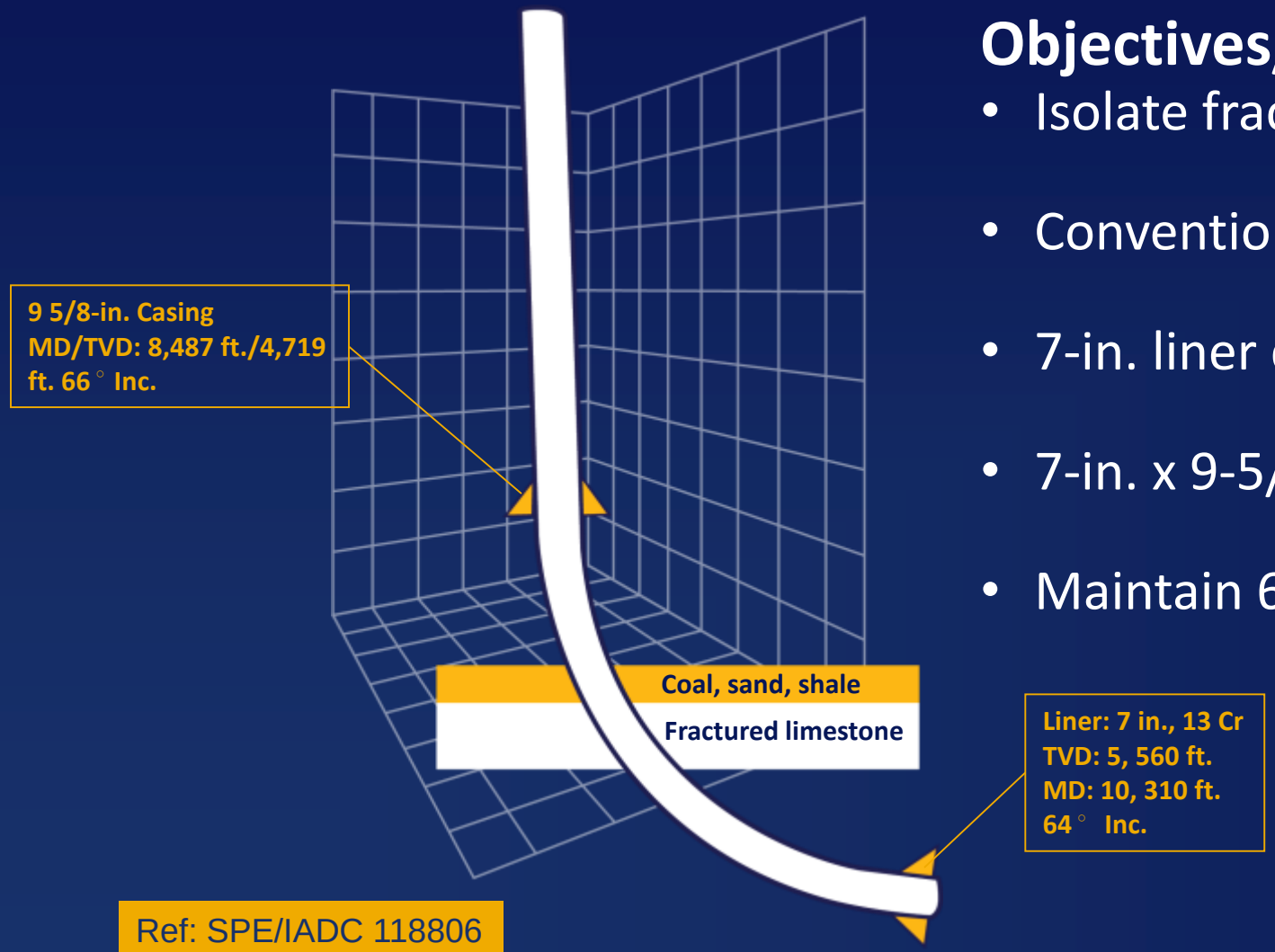

Objectives/Results:

- Isolate fractured lime loss interval with 7-in. liner
- Conventional methods resulted in two sidetracks
- 7-in. liner drilled in 349 feet with total losses
- 7-in. x 9-5/8-in. annulus kept full
- Maintain 67° inclination

Ref: SPE/IADC 118806

Offshore Mexico

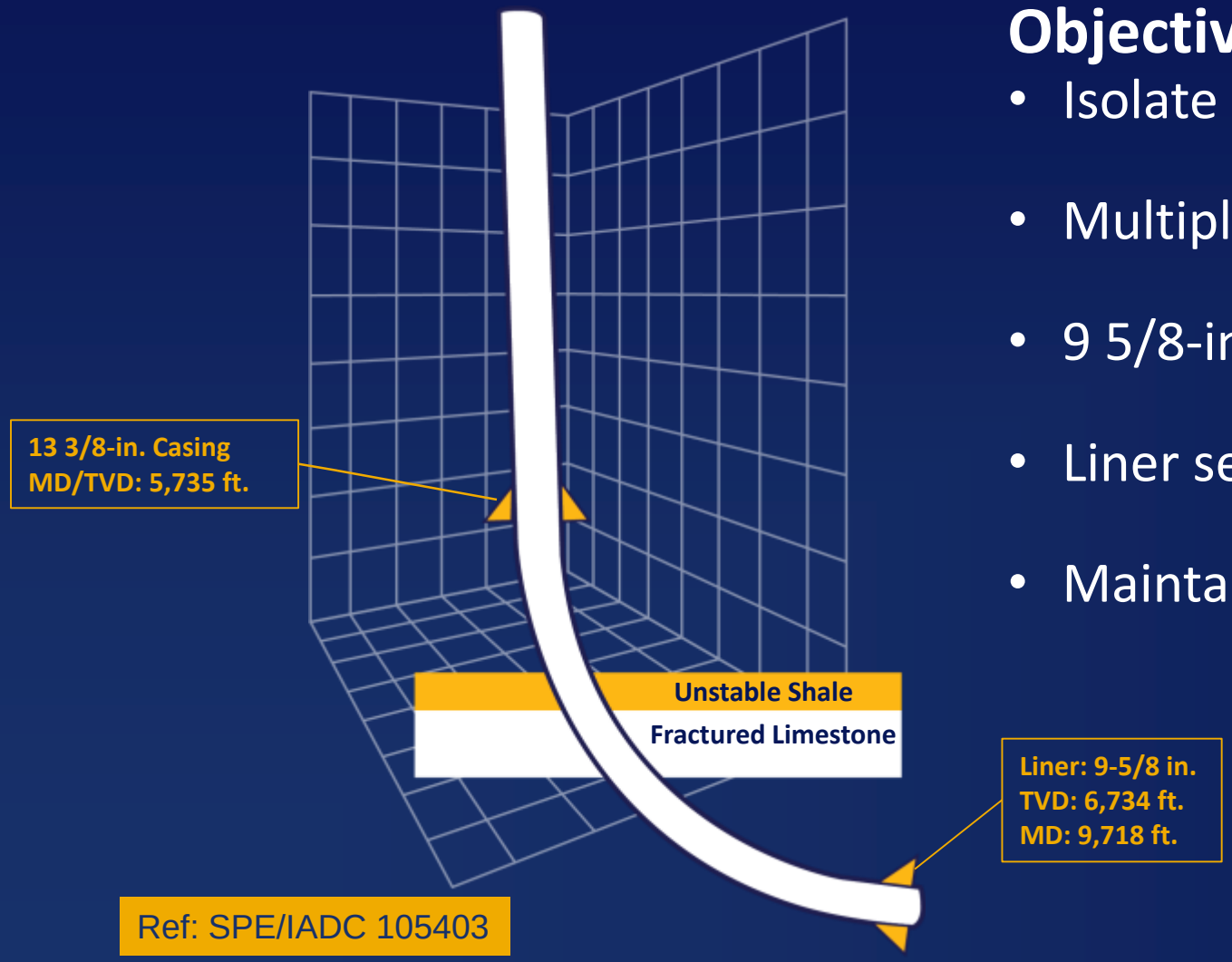

Ref: SPE/IADC 105403

Objectives/Results:

- Isolate unstable shale with 9 5/8-in. liner
- Multiple stuck pipe events due to shale collapse
- 9 5/8-in. liner drilled in 266 feet without losses
- Liner set in caprock overlying fractured lime
- Maintained 75° inclination

Key Takeaways For Liner Drilling

SPE DISTINGUISHED LECTURER

- Drilling hazards can be mitigated in a single trip.
- No rig modifications are required.
- Losses are more manageable than with conventional drilling.
- **ONE TRIP TO DRILL AND CASE THE HOLE**

SPE DISTINGUISHED LECTURER

Your Feedback is Important

Enter your section in the DL Evaluation Contest by completing the evaluation form for this presentation

Visit SPE.org/dl

#SPEdl

Society of Petroleum Engineers
Distinguished Lecturer Program
www.spe.org/dl